Wm. E. Williams No. 141F

Class 150 B.B NRS Gate Valve ASTM B62

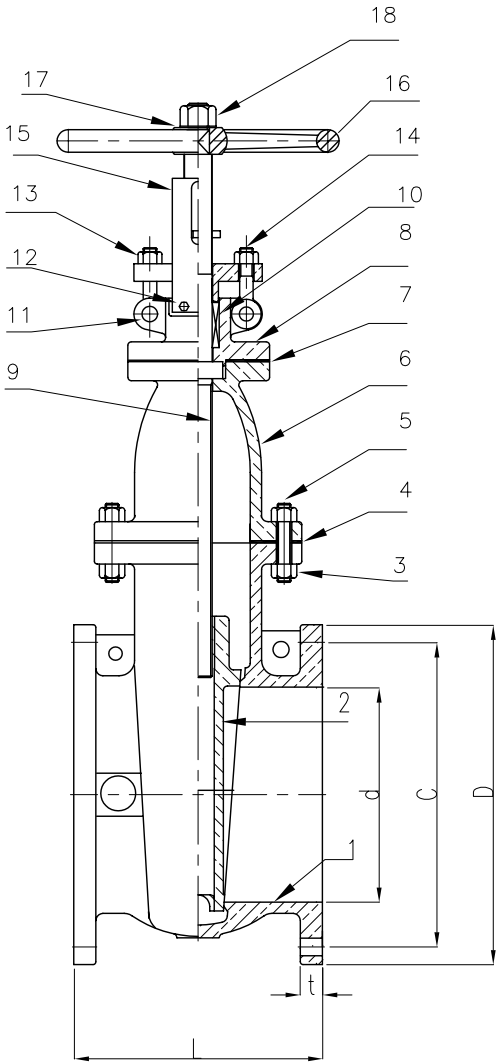

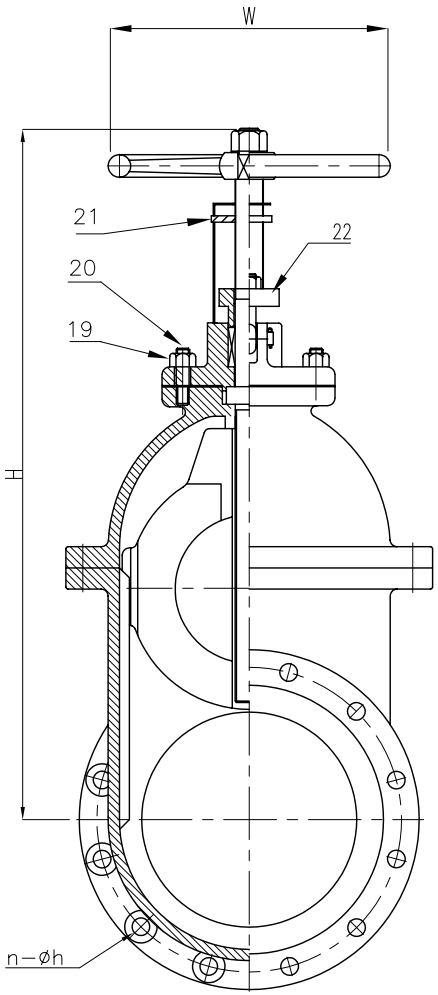

BILL OF MATERIALS

NO.	PART NAME	MATERIALS	Q'TY
1	BODY	ASMT B62	1
2	DISC	ASMT B62	1
3	BONNET NUT	ASTM B16	1SET
4	BONNET GASKET	NON−ASBESTOS	1
5	BONNET BOLT	ASTM B16	1SET
6	BONNET	ASMT B62	1
7	STUFFING BOX GASKET	NON−ASBESTOS	1
8	STUFFING BOX	ASMT B62	1
9	STEM	ASTM B124	1
10	PACKING	TFE	1SET
11	HINGE PIN	ASTM B16	2
12	PLATE LOCKING SCREW	STEEL	2
13	GLAND NUT	ASTM B16	2
14	GLAND BOLT	ASTM B16	2
15	INDICATOR PLATE	BRASS	1
16	HAND WHEEL	ASTM A216 GR WCB	1
17	WASHER	BRASS	1
18	HANDWHEEL NUT	ASTM B16	1
19	STUFFING BOX NUT	ASTM B16	1SET
20	STUFFING BOX STUD	ASTM B16	1SET
21	INDICATOR	ASMT B62	1
22	PACKING GLAND	ASMT B62	1

UNIT:INCH

SIZE	d	C	D	L	t	W	H	n−øh
2.00	2.00	4.75	6.00	7.00	0.50	7.00	10.19	4−0.75
2.50	2.50	5.50	7.00	7.50	0.56	7.00	11.18	4−0.75
3.00	3.00	6.00	7.50	8.00	0.63	7.87	13.18	4−0.75
3.50	3.50	7.00	8.50	8.50	0.69	8.82	13.50	8−0.75
4.00	4.00	7.50	9.00	9.00	0.69	8.82	15.62	8−0.75
5.00	5.00	8.50	10.00	10.00	0.75	11.00	16.50	8−0.87
6.00	6.00	9.50	11.00	10.50	0.82	11.00	20.50	8−0.87
8.00	8.00	11.75	13.50	11.50	0.94	12.39	22.32	8−0.87
10.00	10.00	14.25	16.00	13.00	1.00	14.00	29.28	12−1.00
12.00	12.00	17.00	19.00	14.00	1.06	15.75	33.25	12−1.00

WILLIAMS VALVE CORPORATION

NO.	DATE	DESCRIPTION	PRP'D	REV'D	APP'D
3					
2					
1	07/14/03	CORRECTED H DIM 10".			

APPLICABLE STANDARDS: MSS-SP-6, MSS-SP-25, MSS-SP-9, MSS-SP-82, DESIGNED ANSI B16.24

INSPECTION & TEST: API 598

SHELL	HYDRO	350 PSIG
SEAT	HYDRO	225 PSIG
BACK SEAT	HYDRO	225 PSIG

TITLE: CAST BRONZE NRS CLASS 150 B,B GATE VALVE

SCALE	Fig #	DRAWING NO.	REV.
NONE	141F	20BR060156	0

Wm. E. Williams No. 111F

Class 150 Union Bonnet Gate Valve ASTM B62

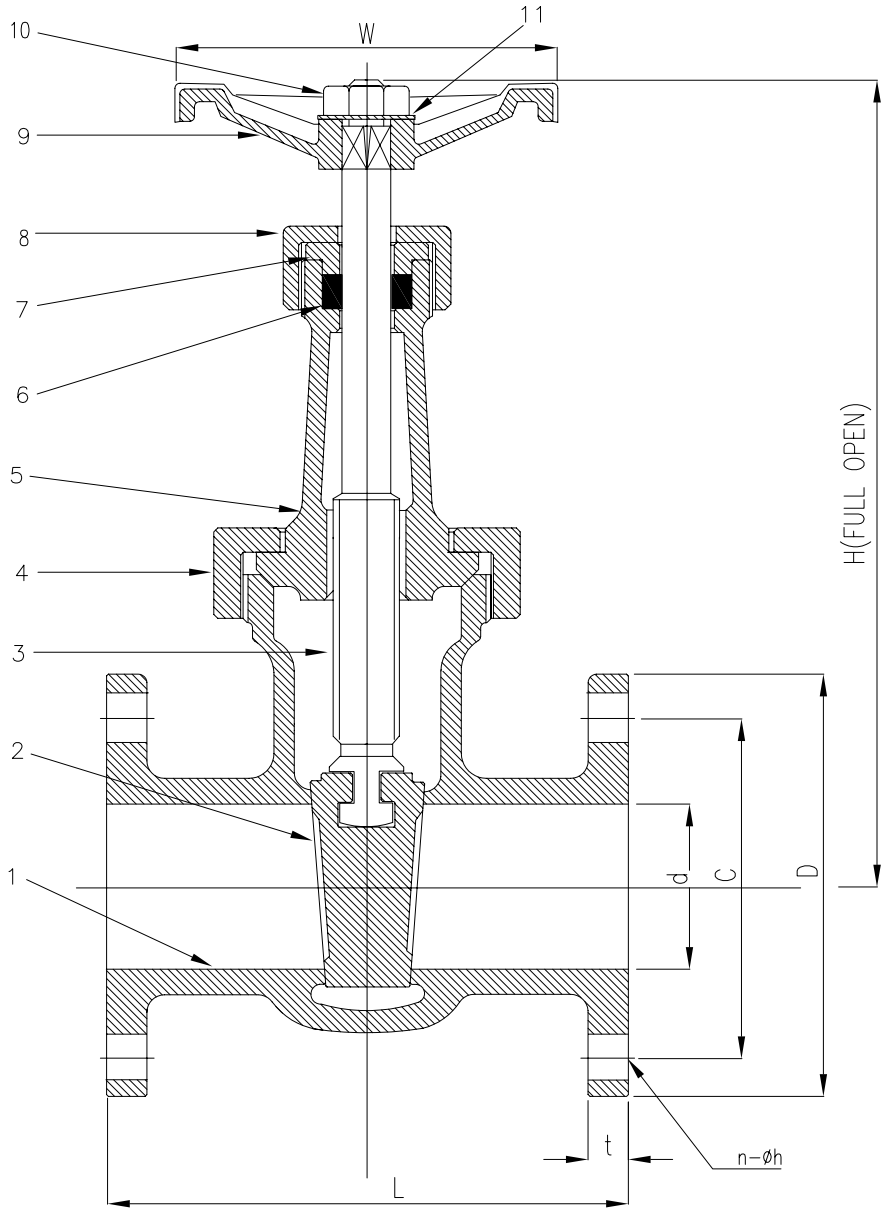

No	PARTS	MATERIAL	Q'TY	REMARK
11	NAME PLATE	ALUMINUM	1	
10	HANDWHEEL NUT	ASTM B16	1	
9	HANDWHEEL	ASTM A126 GR B	1	
8	PACKING NUT	ASTM B62	1	
7	PACKING GLAND	ASTM B124	1	
6	PACKING	TFE	1	NOTE 1
5	BONNET	ASTM B62	1	
4	UNION NUT	ASTM B62	1	
3	STEM	ASTM B124	1	
2	DISC	ASTM B62	1	
1	BODY	ASTM B62	1	

NOTE:

1. ALSO AVAILABLE IN GRAPHITE.
   PLEASE SPECIFY WHEN ORDERING

UNIT:INCH

SIZE	d	L	D	C	t	H	n-øh	W
1/2	0.50	3.16	3.50	2.37	0.312	6.18	4-0.62	2.37
3/4	0.75	3.53	3.88	2.75	0.343	7.32	4-0.62	2.63
1.00	1.00	4.25	4.25	3.12	0.375	7.68	4-0.62	3.06
11/4	1.25	4.50	4.63	3.50	0.406	9.50	4-0.62	3.25
11/2	1.50	4.68	5.00	3.87	0.437	10.43	4-0.62	4.00
2.00	2.00	5.50	6.00	4.75	0.500	12.68	4-0.75	4.00
21/2	2.50	6.50	7.00	5.50	0.562	15.25	4-0.75	4.75
3.00	3.00	7.50	7.50	6.00	0.625	18.25	4-0.75	6.50
4.00	4.00	9.00	9.00	7.50	0.687	22.00	8-0.75	8.75

NO.	DATE	DESCRIPTION	PRP'D	REV'D	APP'D
2					
1	07/23/01	REDRAW			
0					

APPLICABLE STANDARDS		INSPETION &TEST: MSS-SP80	
MSS-SP6	MSS-SP25	SHELL	HYDRO 350 PSIG
MSS-SP9	MSS-SP82	BACK SEAT	HYDRO 225 PSIG
DESIGNED	ANSI B16,24	SEAT	HYDRO 225 PSIG

WILLIAMS VALVE CORPORATION

TITLE	BRONZE U.B GATE VALVE CLASS 150			
SCALE	Fig #	DRAWING NO.	DATE:	REV.
NONE	111F	20BR060160	07-23-01	01

Wm. E. Williams No. 142F

Class 150 B.B. OS&Y F.F. Gate Valve ASTM B62

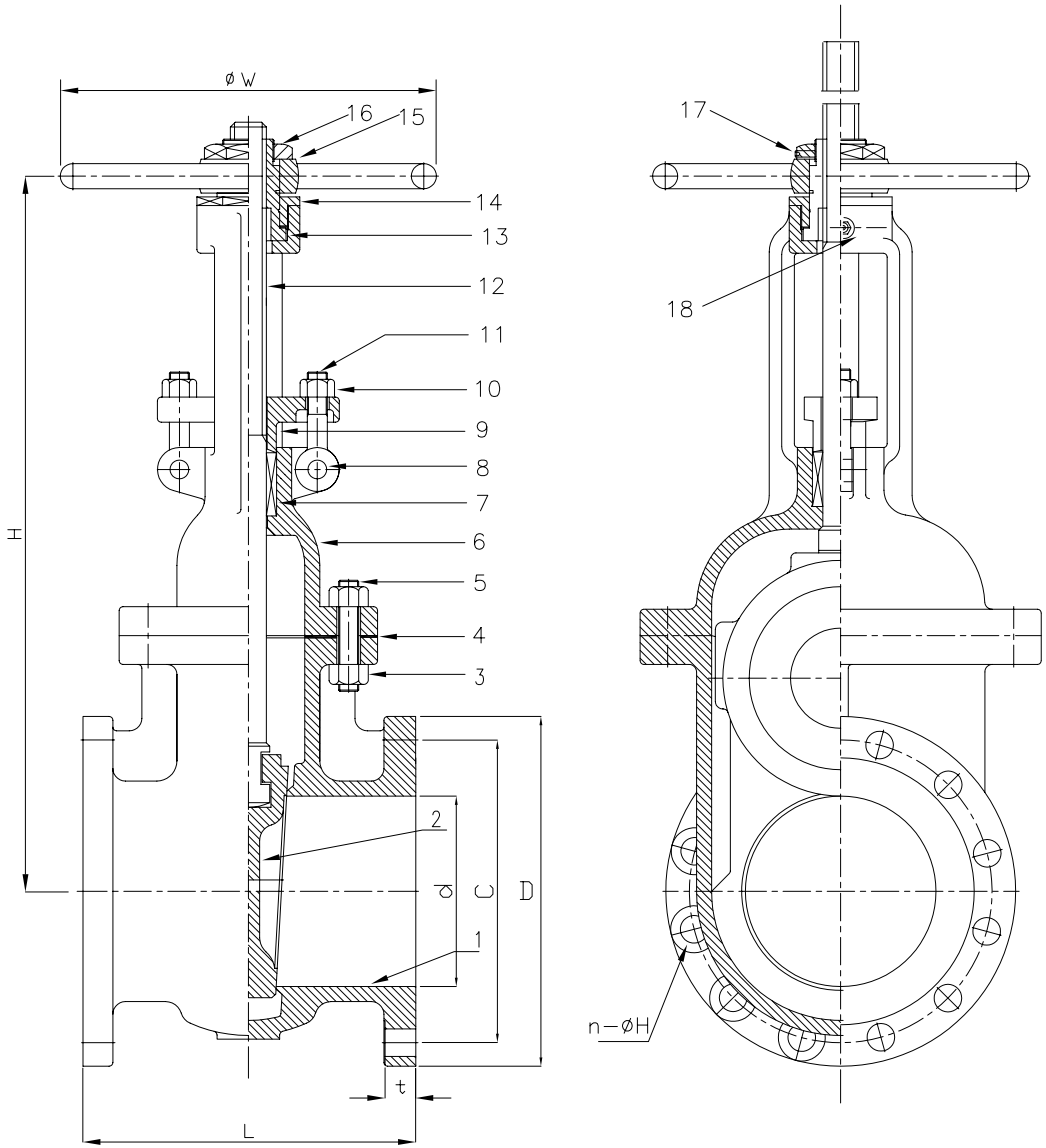

No	PARTS	MATERIAL	Q'TY	REMARK
18	GREASNIPPLE	STEEL	1	
17	SET SCREW	ALLOY STEEL	1	
16	HANDWHEEL NUT	C/S 1020	1	
15	HAND WHEEL	ASTM A197	1	
14	YOKE CAP NUT	ASTM B62	1	
13	STEM NUT	ASTM B62	1	
12	STEM	ASTM B124	1	NOTE 2
11	GLAND EYE BOLT	ASTM B16	2	
10	GLAND EYE BOLT NUT	ASTM B16	2	
9	GLAND FLANGE	ASTM B62	1	
8	GLAND EYE BOLT PIN	ASTM B16	2	
7	PACKING	TFE	1	NOTE 2
6	BONNET	ASTM B62	1	
5	BONNET STUD	ASTM B16	1set	
4	GASKET	NON−ASBESTOS	1	NOTE 2
3	BONNET STUD NUT	ASTM B16	1set	
2	DISC	ASTM B62	1	NOTE 2&3
1	BODY	ASTM B62	1	

NOTE:

1. STANDARD INTEGRAL SEAT.
2. ALTERNATE MATERIALS AVAILABLE UPON REQUEST.
3. SOLID WEDGE.

UNIT:INCH

SIZE	L	d	D	C	t	H	n−øh	W
2.00	7.00	2.00	6.00	4.75	0.50	11.50	4−0.75	7.063
3.00	8.00	3.00	7.50	6.00	0.56	14.75	4−0.75	7.063
3.50	8.50	3.50	8.50	7.00	0.63	16.00	4−0.75	7.870
4.00	9.00	4.00	9.00	7.50	0.69	19.37	8−0.75	8.820
5.00	10.00	6.00	10.00	8.50	0.75	20.12	8−0.75	8.820
6.00	10.50	6.00	11.00	9.50	0.813	24.12	8−0.87	9.870
8.00	11.50	8.00	13.50	11.75	0.94	35.62	8−0.87	12.31
10.00	13.00	10.00	16.00	14.25	1.00	44.82	12−1.00	14.00
12.00	14.00	12.00	19.00	17.00	1.062	52.62	12−1.00	15.75

NO.	DATE	DESCRIPTION	PRP'D	REV'D	APP'D
2					
1					
0					

APPLICABLE STANDARDS		INSPECTION & TEST: API 598	
MSS−SP6	MSS−SP25	SHELL	HYDRO 350 PSIG
MSS−SP9	MSS−SP82	BACK SEAT	HYDRO 225 PSIG
DESIGNED	ANSI B16,24	SEAT	HYDRO 225 PSIG

WILLIAMS VALVE CORPORATION

TITLE	CAST BRONZE GATE VALVE CLASS 150 OS&Y B.B F.F		
SCALE	Fig #	DRAWING NO.	REV.
NONE	142F	20BR060157	0