Wm. E. Williams No. 150F2 Class 1500 RF OS&Y Gate Valve ASTM A 216 WCB (API Trim 8)

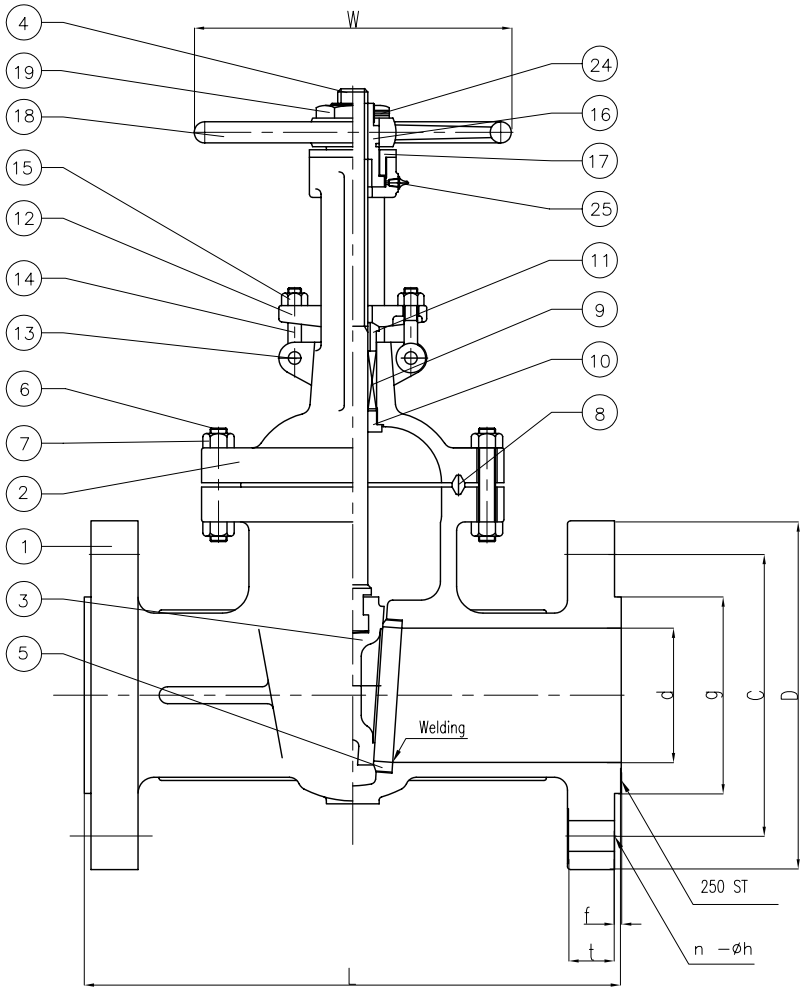

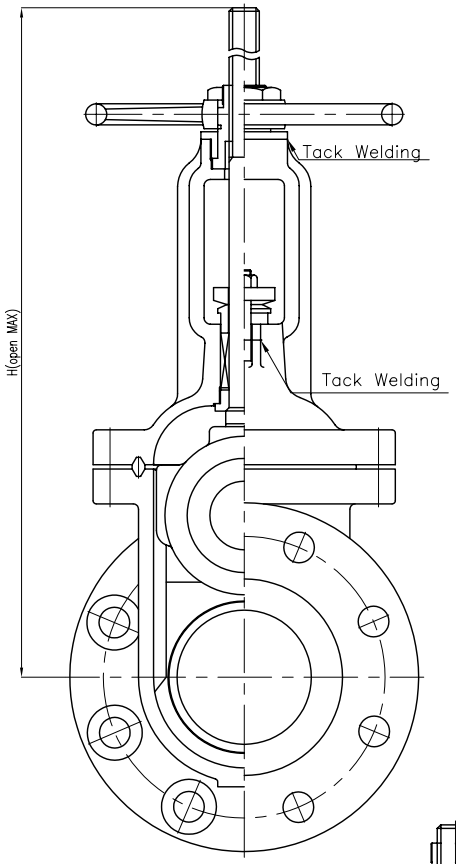

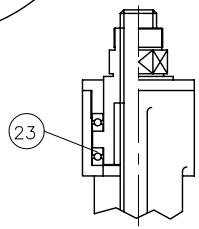

THRUST BALL BEARINGS
6" AND ABOVE

BILL OF MATERIALS

NO.	PART NAME		MATERIALS	Q'TY
1	BODY		A216Gr WCB	1
2	BONNET		A216Gr WCB	1
3	DISC	6"&BELOW	A217Gr CA15	1
		8"&OVER	A216 WCB W/13Cr FACED	
4	STEM		A479Gr 410	1
5	SEAT RING		A105 H/F CO-CrA	2
6	BONNET BOLT		A193Gr B7	1SET
7	BONNET NUT		A194Gr 2H	1SET
8	GASKET		P#1500	1
9	PACKING		P#6610+P#6528	1SET
10	BACK SEAT		A479Gr 410	1
11	GLAND RING		A479Gr 410	1
12	GLAND FLANGE		A105 or WCB	1
13	HINGE PIN		A105 or 410	2
14	GLAND BOLT		A307Gr B	2
15	GLAND NUT		A307Gr B	2
16	YOKE SLEEVE		A439Gr D2C	1
17	SLEEVE NUT		A479Gr 410 or WCB	1
18	HAND WHEEL		A197	1
19	HANDLE NUT		A479Gr 410 or WCB	1
23	BEARING		STEEL	2
24	SET SCREW		STEEL	1
25	GREASE NIPPLE		STEEL	1

NO.	DATE	DESCRIPTION	PRP'D	REV'D	APP'D
2					
1		Rechecked Dim			
0		ISSUED FOR PROPOSAL			

WILLIAM E. WILLIAMS VALVE CORPORATION

UNIT:INCH

SIZE	d	L	D	C	g	t	f	n−h	H	W
2.00	1.88	14.50	8.500	6.500	3.620	1.500	0.250	8−1.00	21.37	10.27
3.00	2.75	18.50	10.50	8.000	5.000	1.880	0.250	8−1.25	25.90	13.97
4.00	3.62	21.50	12.25	9.500	6.180	2.120	0.250	8−1.38	37.08	17.71
6.00	5.38	27.75	15.50	12.50	8.500	3.250	0.250	12−1.50	40.70	22.05
8.00	7.00	32.75	19.00	15.50	10.62	3.620	0.250	12−1.75	57.72	23.62

MARKING SYSTEM	MSS-SP-25	INSPECTION & TEST: API 598		
DIM.OF FLANGE	ANSI B16.5	SHELL	HYDRO	5515PSI
FACE TO FACE	ANSI B16.10	SEAT	AIR	80PSI
WALL THICKNESS	API 600	BACK SEAT	HYDRO	4100PSI
DESIGNED	API 600, ANSI B16.34			

TITLE CAST STEEL GATE VALVE
CLASS 1500 R,F.B,B. OS&Y

SCALE	Fig #	DRAWING NO.	REV.
NONE	150F2	38GA060089	01

Wm. E. Williams No. 15W2 Class 150 BW OS&Y Gate Valve ASTM A 216 WCB (API Trim 8)

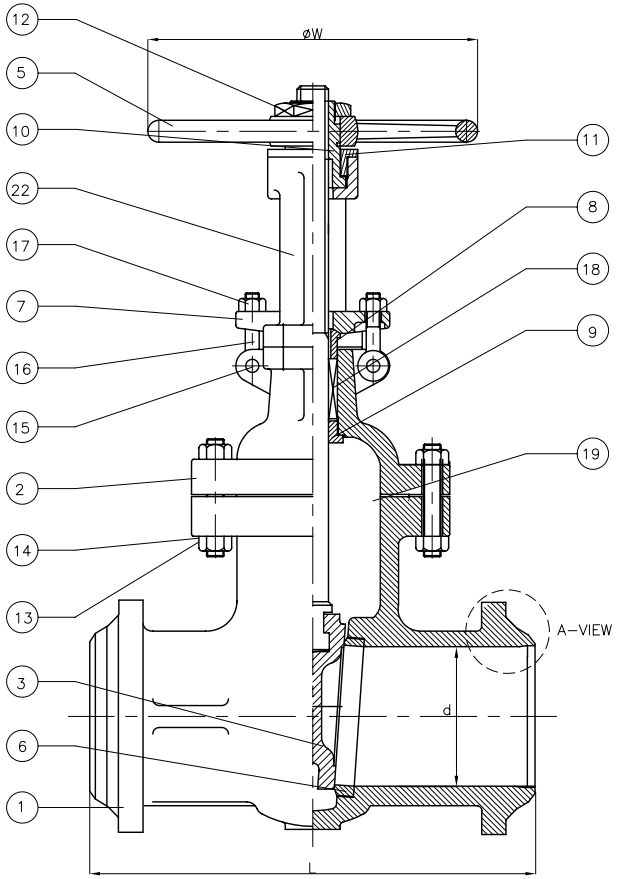

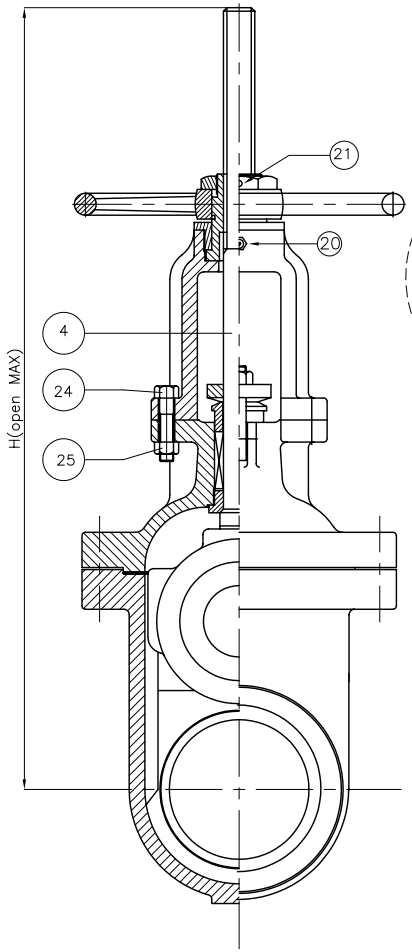

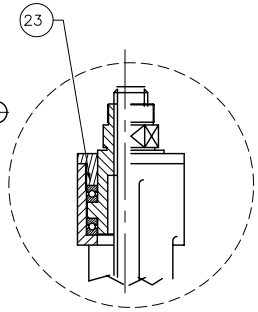

Thrust ball bearings
14" and above

No:	Part	Material	Specifications
25	YOKE NUT	Carbon Steel	A307Gr B
24	YOKE BOLT	Carbon Steel	A307Gr B
23	BEARING	Steel	
22	YOKE	Carbon Steel	A216Gr WCB
21	SET SCREW	Steel	
20	NIPPLE	Steel	
19	GASKET	Metal	Graphite Overlay
18	PACKING	Graphited	P#6610+P#6528
17	GLAND NUT	Carbon Steel	A307Gr B
16	GLAND BOLT	Carbon Steel	A307Gr B
15	GLAND BOLT PIN	Carbon Steel	A105
14	BONNET NUT	Carbon Steel	A194Gr 2H
13	BONNET BOLT	Carbon Steel	A193Gr B7
12	HANDLE NUT	Carbon Steel	A105 or WCB
11	SLEEVE NUT	Carbon Steel	A105 or WCB
10	YOKE SLEEVE	Ductile Iron	A439Gr D2C
9	BACK SEAT	Stainless Steel ①	A479Gr 410
8	GLAND RING	Stainless Steel	A479Gr 410
7	GLAND FLANGE	Carbon Steel	A105 or WCB
6	SEAT RING	A105/HF ①	Stellite faced
5	HAND WHEEL	Ductile Iron	A197
4	STEM	Stainless Steel ①	A479Gr 410
3	WEDGE	A216Gr WCB ①	410/WELD
2	BONNET	Carbon Steel	A216Gr WCB
1	BODY	Carbon steel	A216Gr WCB

NOTE:

1. SPECIFY PIPE SCHEDULE No. REQUIED.
2. RIM #2, (API #8), OTHER TRIMS AVAILABLE

UNIT:INCH

SIZE	d	L	H	W
2.00	2.00	8.50	15.75	7.08
2.50	2.50	9.50	17.75	7.08
3.00	3.00	11.12	20.50	8.81
4.00	4.00	12.00	23.30	10.25
5.00	5.00	15.00	27.75	10.25
6.00	6.00	15.88	32.00	11.81
8.00	8.00	16.50	39.50	14.00
10.00	10.00	18.00	47.63	15.57
12.00	12.00	19.75	56.00	17.72
14.00	14.00	22.50	61.50	22.00
16.00	15.25	24.00	72.83	22.00
18.00	17.25	26.00	77.20	23.62
20.00	19.25	28.00	87.00	25.62
24.00	23.25	32.00	100.0	25.62

*Other size available upon request.

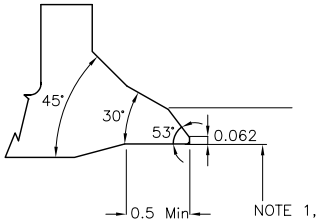

A–VIEW

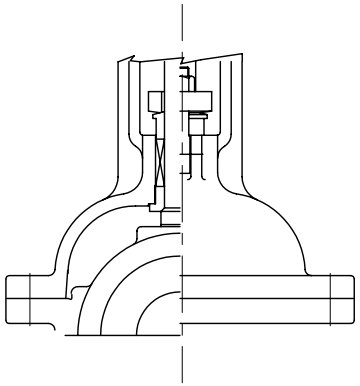

One piece bonnet
used for 2"–8"

STANDARDS		
Face to Face / End to End	ANSI B16.10	
Buttweldnig End	ANSI 16.25	
Basic Design	API 600 ANSI B16.34	
Testing	API 598	

DATE	REVISION RECORD

WILLIAM E. WILLIAMS
VALVE CORPORATION
38–52 REVIEW AVE L.I.C N.Y 1110 1

TITLE : CAST STEEL GATE VALVE
CLASS 150 B,B OS&Y, BUTTWELD END

Fig# 15W–2	SIZE: 2"–24"	
MAT'L: WCB	SCALE: NONE	SHEET: 1/1

DATE	DR.	CHK.	APP'D	DWG# 60GA060118

Wm. E. Williams No. 15F2 Class 150 RF OS&Y Gate Valve ASTM A 216 WCB (API Trim 8)

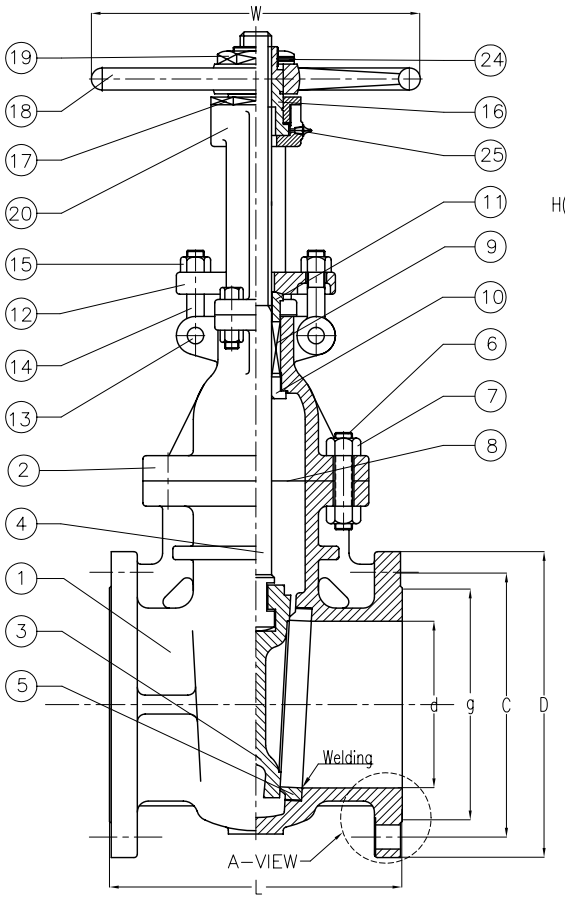

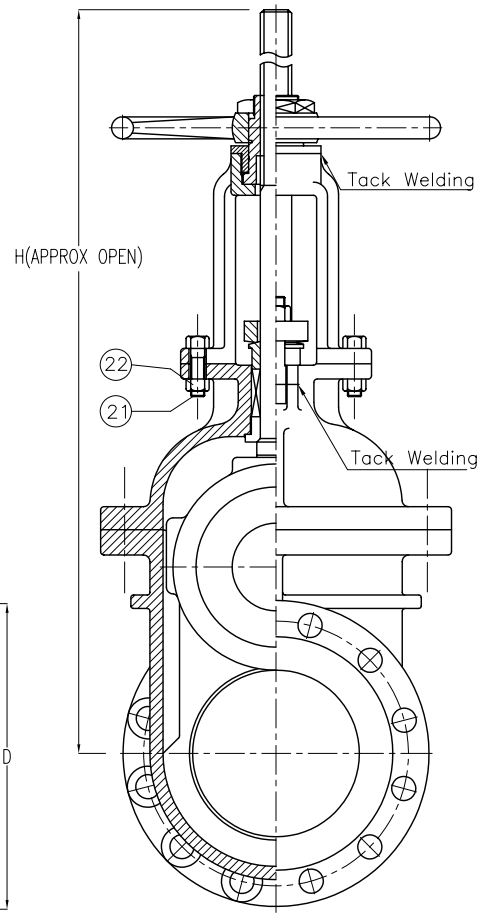

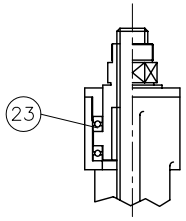

THRUST BALL BEARING
FOR 14" AND ABOVE.

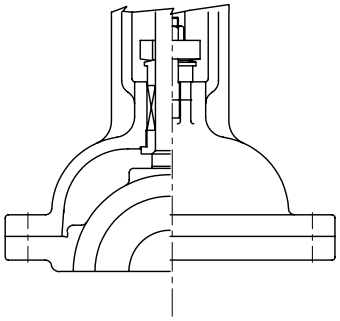

ONE PIECE BONNET
2"–8"

MATERIAL SPECIFICATION			
NO.	PART NAME	MATERIALS	Q'TY
1	BODY	A216Gr WCB	1
2	BONNET	A216Gr WCB	1
3	DISC 2"–6"	A217 CA15	1
	DISC 8"&OVER	A216GR WCB W/13CrFACED	1
4	STEM	A479 Gr410 (13Cr)	1
5	SEAT RING	A105 H/F CO–CrA	2
6	BONNET BOLT	A193Gr B7	1SET
7	BONNET NUT	A194Gr 2H	1SET
8	GASKET	P#1400G	1
9	PACKING	P#6610+P#6528	1SET
10	BACK SEAT	A479 Gr 410	1
11	GLAND RING	A479 Gr 410	1
12	GLAND FLANGE	A105 or WCB	1
13	HINGE PIN	A105 or 410	2
14	GLAND BOLT	A307Gr B	2
15	GLAND NUT	A307Gr B	2
16	YOKE SLEEVE	A439Gr D2C	1
17	SLEEVE NUT	A479Gr 410 or WCB	1
18	HAND WHEEL	A197	1
19	HANDLE NUT	A479Gr 410 or WCB	1
20	YOKE	A216Gr WCB	1
21	YOKE BOLT	A307Gr B	4
22	YOKE NUT	A307Gr B	4
23	BEARING	STEEL	2
24	SET SCREW	STEEL	1
25	GREASE NIPPLE	STEEL	1

UNIT:INCH

SIZE	d	L	D	C	g	t	f	n–h	H	W
2.00	2.00	7.00	6.00	4.75	3.63	0.63	0.060	4–0.75	15.75	7.00
2.50	2.50	7.50	7.00	5.55	4.13	0.69	0.060	4–0.75	16.75	7.00
3.00	3.00	8.00	7.50	6.00	5.00	0.75	0.060	4–0.75	21.12	9.82
4.00	4.00	9.00	9.00	7.50	6.18	0.94	0.060	8–0.75	22.37	10.50
5.00	5.00	10.00	10.00	8.50	7.32	0.94	0.060	8–0.87	26.37	10.50
6.00	6.00	10.50	11.00	9.50	9.50	1.00	0.060	8–0.87	31.22	12.00
8.00	8.00	11.50	13.50	11.75	10.63	1.13	0.060	8–0.87	38.85	15.00
10.00	10.00	13.00	16.00	14.25	12.75	1.19	0.060	12–1.00	46.88	15.75
12.00	12.00	14.00	19.00	17.00	15.00	1.25	0.060	12–1.00	54.29	17.71
14.00	13.25	15.00	21.00	18.75	16.25	1.38	0.060	12–1.12	66.88	22.00
16.00	15.25	16.00	23.50	21.25	18.50	1.44	0.060	16–1.12	71.25	22.00
18.00	17.25	17.00	25.00	22.75	21.00	1.56	0.060	16–1.25	80.70	23.62
20.00	19.25	18.00	27.00	25.00	23.00	1.69	0.060	20–1.25	83.85	25.60
24.00	23.25	20.00	32.00	29.50	27.25	1.88	0.060	20–1.37	103.5	25.60

*Larger sizes available.

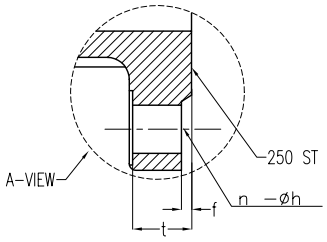

WILLIAMS
VALVE CORPORATION

NO.	DATE	DESCRIPTION	PRP'D	REV'D	APP'D
2					
1		RECHECKED DIM			
0		ISSUED FOR PROPOSAL			

MARKING SYSTEM	MSS–SP–25	INSPECTION & TEST: API 598		
DIM.OF FLANGE	ANSI B16.5	SHELL	HYDRO	450PSI
FACE TO FACE	ANSI B16.10	SEAT	AIR	80PSI
WALL THICKNESS	API 600	BACK SEAT	HYDRO	315 PSI
DESIGNED	API 600, ANSI B16.34			

TITLE CAST STEEL GATE VALVE
CLASS 150 R,F B,B OS&Y

SCALE	Fig #	DRAWING NO.	REV.
NONE	15F2	60GA060113	01

Wm. E. Williams No. 30W2 Class 300 BW OS&Y Gate Valve ASTM A 216 WCB (API Trim 8)

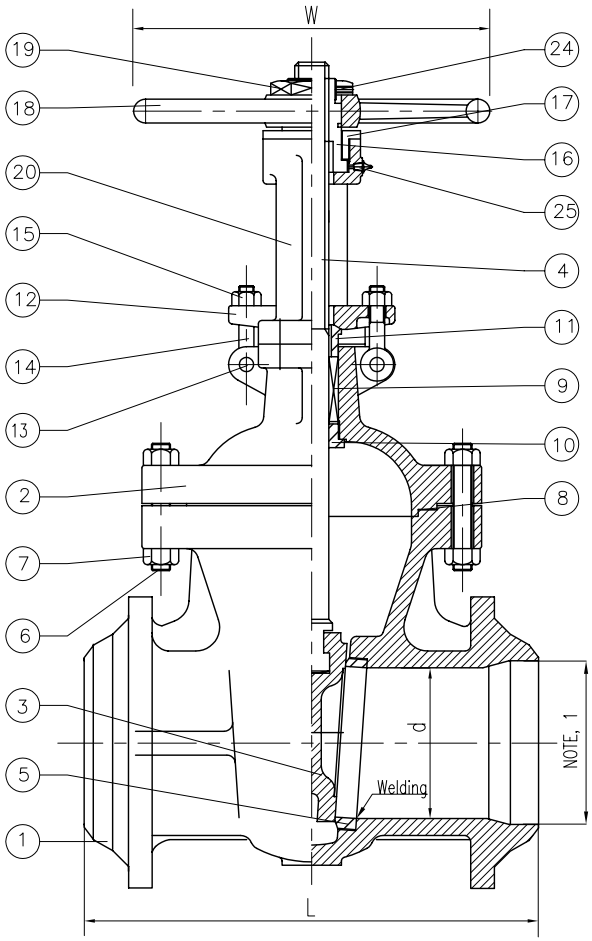

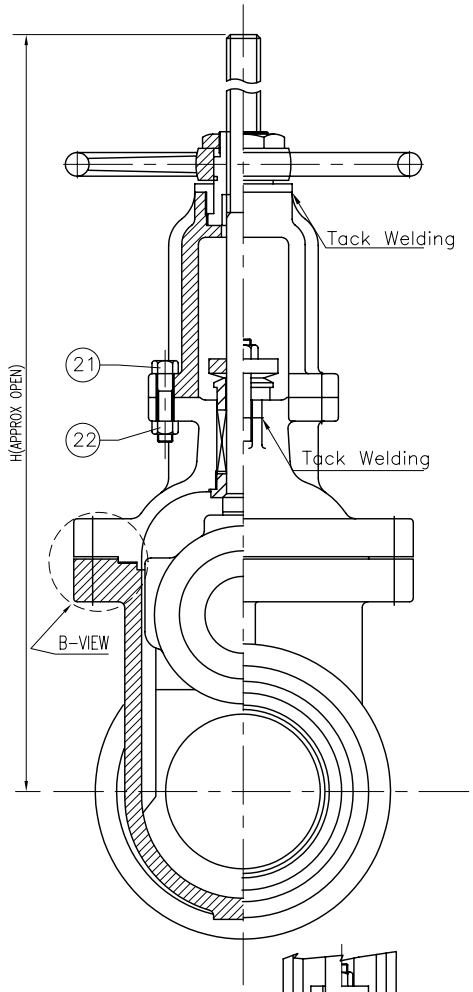

BILL OF MATERIALS

NO.	PART NAME		MATERIALS	Q'TY
1	BODY		A216Gr WCB	1
2	BONNET		A216Gr WCB	1
3	DISC	2"-6"	A217 CA15	1
		8"&OVER	A216 GR WCB W/13Cr FACE	1
4	STEM		A479Gr 410	1
5	SEAT RING		A105 H/F CO-Cr A	2
6	BONNET BOLT		A193Gr B7	1SET
7	BONNET NUT		A194Gr 2H	1SET
8	GASKET		P#1400G	1
9	PACKING		P#6610+P#6528	1SET
10	BACK SEAT		A479Gr 410	1
11	GLAND RING		A479Gr 410	1
12	GLAND FLANGE		A105 or WCB	1
13	HINGE PIN		A105 or 410	2
14	GLAND BOLT		A307Gr B	2
15	GLAND NUT		A307Gr B	2
16	YOKE SLEEVE		A439Gr D2C	1
17	SLEEVE NUT		A479Gr 410 or WCB	1
18	HAND WHEEL		A197	1
19	HANDLE NUT		A479Gr 410 or WCB	1
20	YOKE		A216Gr WCB	1
21	YOKE BOLT		A307Gr B	4
22	YOKE NUT		A307Gr B	4
23	BEARING		STEEL	2
24	SET SCREW		STEEL	1
25	GREASE NIPPLE		STEEL	1

NOTE:
1. SPECIFY PIPE SCHEDULE No. REQUIED.
2. TRIM #2, (API #8), OTHER TRIMS AVAILABLE

UNIT:INCH

SIZE	d	L	H	W
2.00	2.00	8.50	16.50	7.00
2.50	2.50	9.50	17.50	7.00
3.00	3.00	11.12	20.70	8.75
4.00	4.00	12.00	22.83	10.50
5.00	5.00	15.00	28.22	11.87
6.00	6.00	15.88	32.00	14.00
8.00	8.00	16.50	38.70	15.75
10.00	10.00	18.00	46.81	17.75
12.00	12.00	19.75	54.72	17.85
14.00	13.25	30.00	63.00	22.00
16.00	15.25	33.00	72.83	23.63
18.00	17.00	36.00	80.31	23.63
20.00	19.00	39.00	86.50	25.00
24.00	23.00	45.00	110.75	27.50

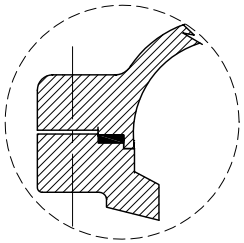

B-VIEW
CAPTURE GASKET

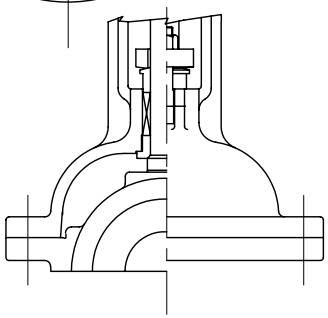

One piece bonnet
used for 2"-8"

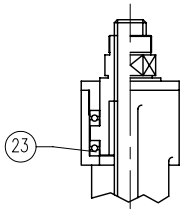

Thrust ball bearing are
used for 14" and above.

NO.	DATE	DESCRIPTION	PRP'D	REV'D	APP'D
2					
1					
0		ISSUED FOR PROPOSAL			

MARKING SYSTEM	MSS-SP-25	INSPECTION & TEST: API 598		
BUTTWELDING END	ANSI B16.25	SHELL	HYDRO	1125PSI
FACE TO FACE	ANSI B16.10	SEAT	AIR	80PSI
WALL THICKNESS	API 600	BACK SEAT	HYDRO	825PSI
DESIGNED	API 600, ANSI B16.34			

ILLIAMS
VALVE CORPORATION

TITLE CAST STEEL BUTTWELD END
CLASS 300 B.B,OS&Y. GATE VALVE

SCALE	Fig #	DRAWING NO.	REV.
NONE	30W-2	60GA060110	01

Wm. E. Williams No. 30F2 Class 300 RF OS&Y Gate Valve ASTM A 216 WCB (API Trim 8)

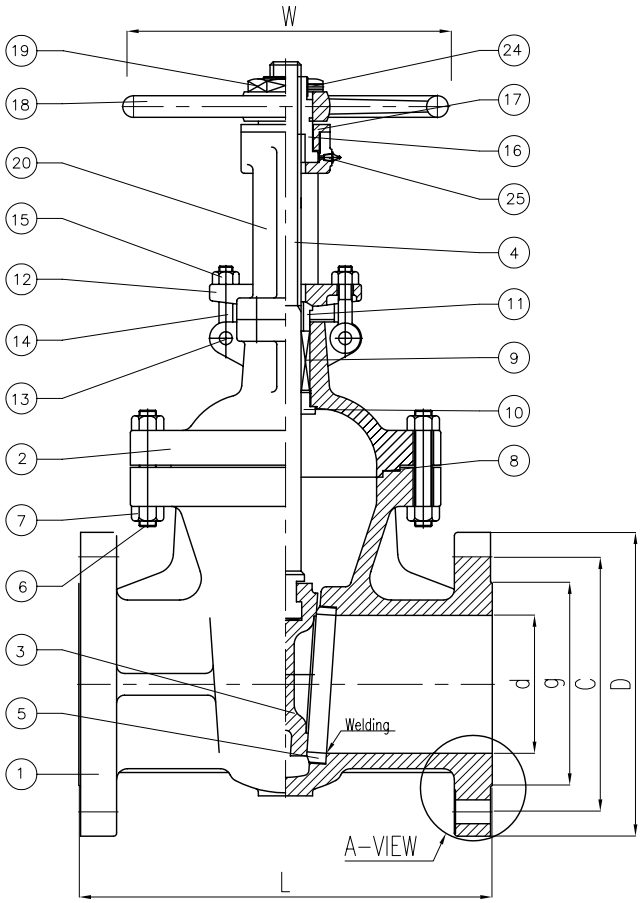

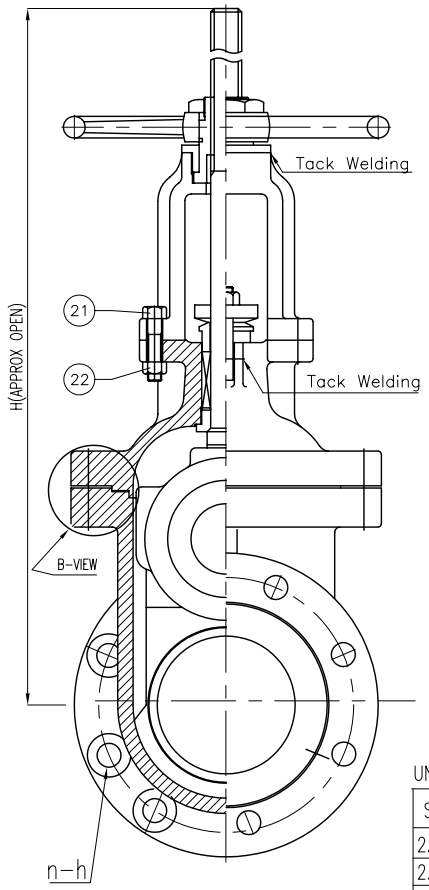

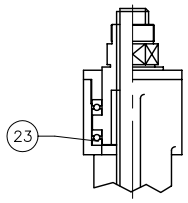

Thrust ball bearing are used for 14" and above.

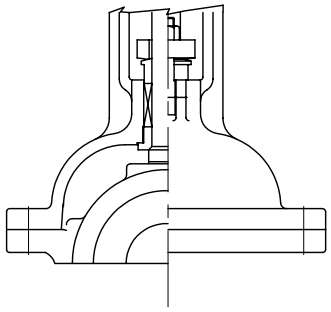

One piece bonnet used for 2"-8"

BILL OF MATERIALS

NO.	PART NAME		MATERIALS	Q'TY
1	BODY		A216Gr WCB	1
2	BONNET		A216Gr WCB	1
3	DISC	2"-6"	A217 CA15	1
		8"&OVER	A216 GR WCB W/13Cr FACE	1
4	STEM		A479Gr 410	1
5	SEAT RING		A105 H/F CO-Cr A	2
6	BONNET BOLT		A193Gr B7	1SET
7	BONNET NUT		A194Gr 2H	1SET
8	GASKET		P#1400G	1
9	PACKING		P#6610+P#6528	1SET
10	BACK SEAT		A479Gr 410	1
11	GLAND RING		A479Gr 410	1
12	GLAND FLANGE		A105 or WCB	1
13	HINGE PIN		A105 or 410	2
14	GLAND BOLT		A307Gr B	2
15	GLAND NUT		A307Gr B	2
16	YOKE SLEEVE		A439Gr D2C	1
17	SLEEVE NUT		A479Gr 410 or WCB	1
18	HAND WHEEL		A197	1
19	HANDLE NUT		A479Gr 410 or WCB	1
20	YOKE		A216Gr WCB	1
21	YOKE BOLT		A307Gr B	4
22	YOKE NUT		A307Gr B	4
23	BEARING		STEEL	2
24	SET SCREW		STEEL	1
25	GREASE NIPPLE		STEEL	1

UNIT:INCH

SIZE	d	L	D	C	g	t	f	n-h	H	W
2.00	2.00	8.50	6.50	5.00	3.63	0.88	0.060	8-0.75	16.50	7.00
2.50	2.50	9.50	7.50	5.875	4.12	1.00	0.060	8-0.87	17.50	7.00
3.00	3.00	11.12	8.25	6.625	5.00	1.12	0.060	8-0.87	20.70	8.75
4.00	4.00	12.00	10.00	7.875	6.18	1.25	0.060	8-0.87	22.83	10.50
5.00	5.00	15.00	11.00	9.250	7.32	1.38	0.060	8-0.87	28.22	11.87
6.00	6.00	15.88	12.50	10.63	8.50	1.44	0.060	12-0.87	32.00	14.00
8.00	8.00	16.50	15.00	13.00	10.62	1.62	0.060	12-1.00	38.70	15.75
10.00	10.00	18.00	17.50	15.25	12.75	1.88	0.060	16-1.12	46.81	17.75
12.00	12.00	19.75	20.50	17.75	15.00	2.00	0.060	16-1.25	54.72	17.85
14.00	13.25	30.00	23.00	20.25	16.25	2.12	0.060	20-1.25	63.00	22.00
16.00	15.25	33.00	25.50	22.50	18.00	2.25	0.060	20-1.37	72.83	23.63
18.00	17.00	36.00	28.00	24.75	21.00	2.38	0.060	24-1.37	80.31	23.63
20.00	19.00	39.00	30.50	27.00	23.00	2.50	0.060	24-1.37	86.50	25.00
24.00	23.00	45.00	36.00	32.00	27.00	2.75	0.060	24-1.62	110.75	27.50

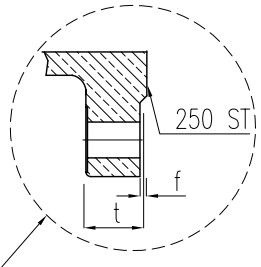

A-VIEW DETAIL

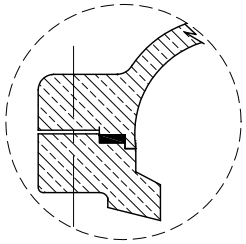

B-VIEW CAPTURE GASKET

NO.	DATE	DESCRIPTION	PRP'D	REV'D	APP'D
2					
1	DEC-01	CORRECT 'L' DIM			
0		ISSUED FOR PROPOSAL			

MARKING SYSTEM	MSS-SP-25	INSPECTION & TEST: API 598		
DIM.OF FLANGE	ANSI B16.5	SHELL	HYDRO	1125PSI
FACE TO FACE	ANSI B16.10	SEAT	AIR	80PSI
WALL THICKNESS	API 600	BACK SEAT	HYDRO	825PSI
DESIGNED	API 600, ANSI B16.34			

ILLIAMS VALVE CORPORATION

TITLE: CAST STEEL GATE VALVE CLASS 300 R,F.B,B.OS&Y.

SCALE	Fig #	DRAWING NO.	REV.
NONE	30F2	60GA060107	01

Wm. E. Williams No. 60W2 Class 600 BW OS&Y Gate Valve ASTM A 216 WCB (API Trim 8)

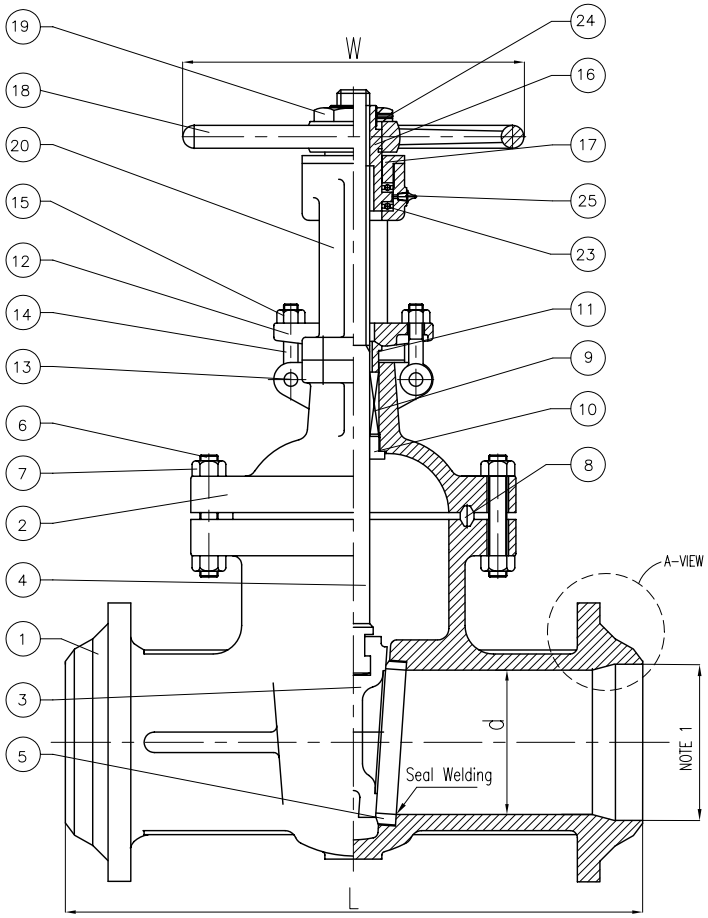

A-VIEW

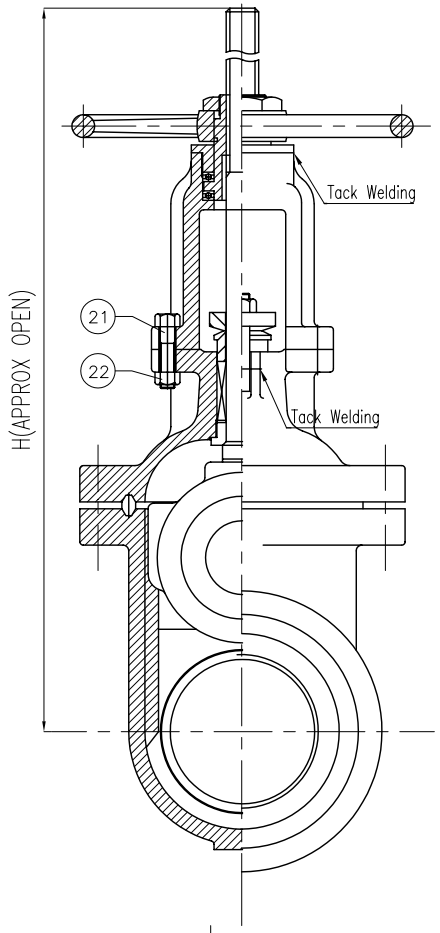

BILL OF MATERIALS

NO.	PART NAME		MATERIALS	Q'TY
1	BODY		A216Gr WCB	1
2	BONNET		A216Gr WCB	1
3	DISC	2"–6"	A217 Gr CA15	1
		8"&ABOVE	A216 Gr WCB W/13Cr FACED	1
4	STEM		A479Gr 410	1
5	SEAT RING		A105 H/F CO–CrA	2
6	BONNET BOLT		A193Gr B7	1SET
7	BONNET NUT		A194Gr 2H	1SET
8	GASKET		P#1500	1
9	PACKING		P#6610+P#6528	1SET
10	BACK SEAT		A479Gr 410	1
11	GLAND RING		A479Gr 410	1
12	GLAND FLANGE		A105 or WCB	1
13	HINGE PIN		A105 or 410	2
14	GLAND BOLT		A307Gr B	2
15	GLAND NUT		A307Gr B	2
16	YOKE SLEEVE		A439Gr D2C	1
17	SLEEVE NUT		A479Gr 410 or WCB	1
18	HAND WHEEL		A197	1
19	HANDLE NUT		A479Gr 410 or WCB	1
20	YOKE		A216Gr WCB	1
21	YOKE BOLT		A307Gr B	4
22	YOKE NUT		A307Gr B	4
23	BEARING		STEEL	2
24	SET SCREW		STEEL	1
25	GREASE NIPPLE		STEEL	1

NOTE:
1. SPECIFY PIPE SCHEDULE No. REQUIED.
2. TRIM #2, (API #8), OTHER TRIMS AVAILABLE

UNIT:INCH

SIZE	d	L	H	W
2.00	2.00	11.50	16.35	8.82
2.50	2.50	13.00	19.37	8.82
3.00	3.00	14.00	21.30	10.25
4.00	4.00	17.00	26.62	11.81
5.00	5.00	20.00	32.50	14.00
6.00	6.00	22.00	35.60	15.75
8.00	7.88	26.00	44.92	17.71
10.00	9.75	31.00	50.95	23.63
12.00	11.75	33.00	63.75	23.63
14.00	12.88	35.00	69.37	25.59
16.00	14.75	39.00	78.15	25.59
18.00	16.50	43.00	87.16	27.55
20.00	18.25	47.00	96.88	31.50
24.00	22.00	55.00	110.62	37.40

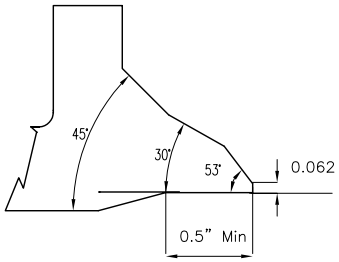

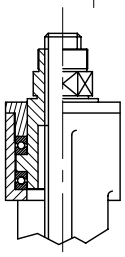

THRUST BALL BEARING
FOR 6"AND ABOVE

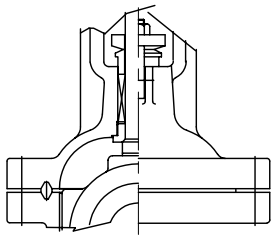

ONE PIECE BONNET
2"–8"

NO.	DATE	DESCRIPTION	PRP'D	REV'D	APP'D
3					
2					
1		ISSUED FOR PROPOSAL			

MARKING SYSTEM	MSS–SP–25	INSPECTION & TEST: API 598		
BUTTWELD END	ANSI B16.25	SHELL	HYDRO	2225PSI
FACE TO FACE	ANSI B16.10	SEAT	AIR	80PSI
WALL THICKNESS	API 600	BACK SEAT	HYDRO	1650PSI
DESIGNED	API 600, ANSI B16.34			

WILLIAMS VALVE CORPORATION

TITLE CAST STEEL GATE VALVE
CLASS 600 B,B OS&Y BUTTWELD END

SCALE	Fig #	DRAWING NO.	REV.
NONE	60W-2	60GA06104	01

Wm. E. Williams No. 60F2 Class 600 RF OS&Y Gate Valve ASTM A 216 WCB (API Trim 8)

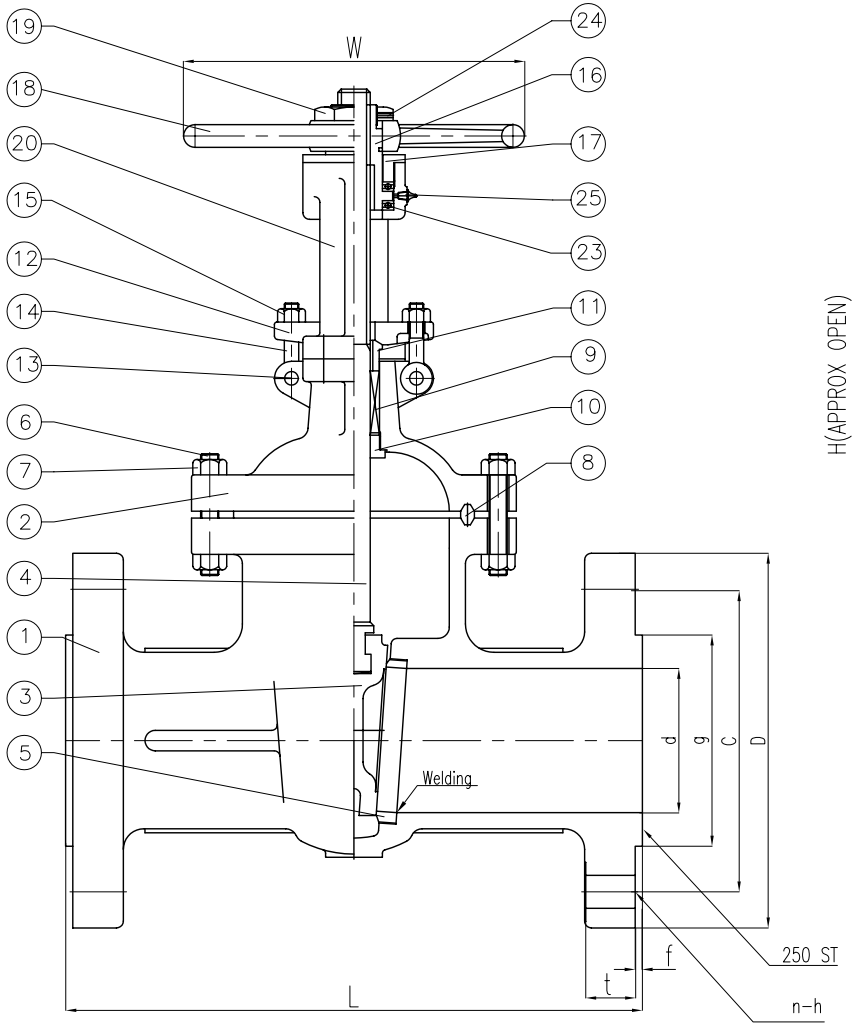

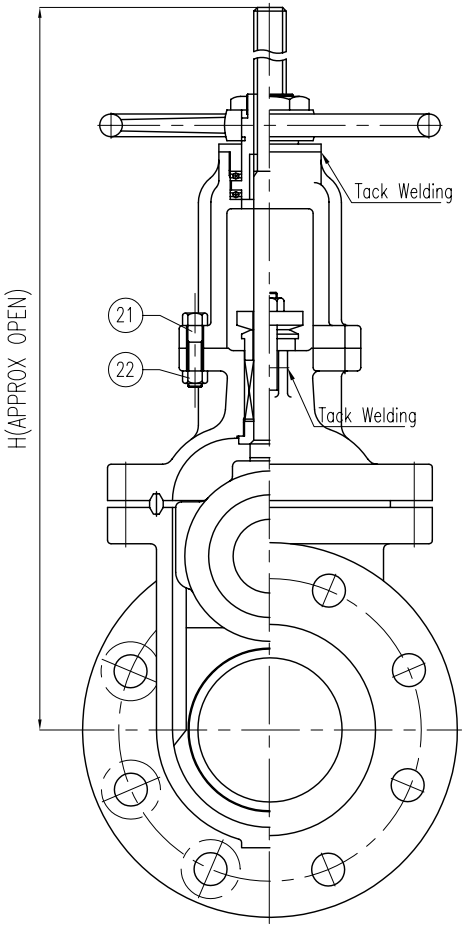

BILL OF MATERIALS

NO.	PART NAME		MATERIALS	Q'TY
1	BODY		A216Gr WCB	1
2	BONNET		A216Gr WCB	1
3	DISC	2"-6"	A217 Gr CA15	1
		8"&ABOVE	A216 Gr WCB W/13Cr FACED	1
4	STEM		A479Gr 410	1
5	SEAT RING		A105 H/F CO-CrA	2
6	BONNET BOLT		A193Gr B7M	1SET
7	BONNET NUT		A194Gr 2HM	1SET
8	GASKET		P#1500	1
9	PACKING		P#6610+P#6528	1SET
10	BACK SEAT		A479Gr 410	1
11	GLAND RING		A479Gr 410	1
12	GLAND FLANGE		A105 or WCB	1
13	HINGE PIN		A105 or 410	2
14	GLAND BOLT		A307Gr B	2
15	GLAND NUT		A307Gr B	2
16	YOKE SLEEVE		A439Gr D2C	1
17	SLEEVE NUT		A479Gr 410 or WCB	1
18	HAND WHEEL		A197	1
19	HANDLE NUT		A479Gr 410 or WCB	1
20	YOKE		A216Gr WCB	1
21	YOKE BOLT		A307Gr B	4
22	YOKE NUT		A307Gr B	4
23	BEARING		STEEL	2
24	SET SCREW		STEEL	1
25	GREASE NIPPLE		STEEL	1

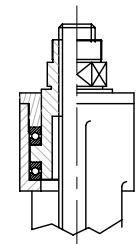

THRUST BALL BEARING
FOR 6"AND ABOVE

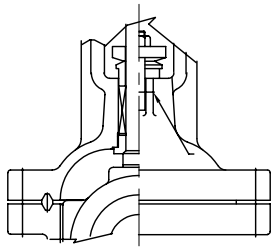

ONE PIECE BONNET
2"-8"

UNIT:INCH

SIZE	d	L	D	C	g	t	f	n-h	H	W
2.00	2.00	11.50	6.50	5.00	3.62	1.00	0.250	8-0.75	16.35	8.82
2.50	2.50	13.00	7.50	5.875	4.12	1.12	0.250	8-0.87	19.37	8.82
3.00	3.00	14.00	8.25	6.625	5.00	1.25	0.250	8-0.87	21.30	10.25
4.00	4.00	17.00	10.75	8.500	6.25	1.50	0.250	8-1.00	26.62	11.81
5.00	5.00	20.00	13.00	10.50	7.32	1.75	0.250	8-1.12	32.50	14.00
6.00	6.00	22.00	14.00	11.50	8.50	1.88	0.250	12-1.12	35.60	15.75
8.00	7.88	26.00	16.50	13.75	10.63	2.19	0.250	12-1.25	44.92	17.71
10.00	9.75	31.00	20.00	17.00	12.75	2.50	0.250	16-1.37	50.95	23.63
12.00	11.75	33.00	22.00	19.25	15.00	2.62	0.250	20-1.37	63.75	23.63
14.00	12.88	35.00	23.75	20.75	16.25	2.75	0.250	20-1.50	69.37	25.59
16.00	14.75	39.00	27.00	23.75	18.50	3.00	0.250	20-1.62	78.15	25.59
18.00	16.50	43.00	29.25	25.75	21.00	3.25	0.250	20-1.75	87.16	27.55
20.00	18.25	47.00	32.00	28.50	23.00	3.50	0.250	20-1.75	96.88	31.50
24.00	22.00	55.00	37.00	33.00	27.25	4.00	0.250	24-2.00	110.62	37.40

NO.	DATE	DESCRIPTION	PRP'D	REV'D	APP'D
2					
1		Rechecked Dim			
0		ISSUED FOR PROPOSAL			

WILLIAMS VALVE CORPORATION

MARKING SYSTEM	MSS-SP-25	INSPECTION & TEST: API 598		
DIM.OF FLANGE	ANSI B16.5	SHELL	HYDRO	2225PSI
FACE TO FACE	ANSI B16.10	SEAT	AIR	80PSI
WALL THICKNESS	API 600	BACK SEAT	HYDRO	1650PSI
DESIGNED	API 600, ANSI B16.34			

TITLE CAST STEEL GATE VALVE
CLASS 600 R,F.B,B OS&Y

SCALE	Fig #	DRAWING NO.	REV.
NONE	60F-2	60GA060102	01

Wm. E. Williams No. 90W2 Class 900 BW OS&Y Gate Valve ASTM A 216 WCB (API Trim 8)

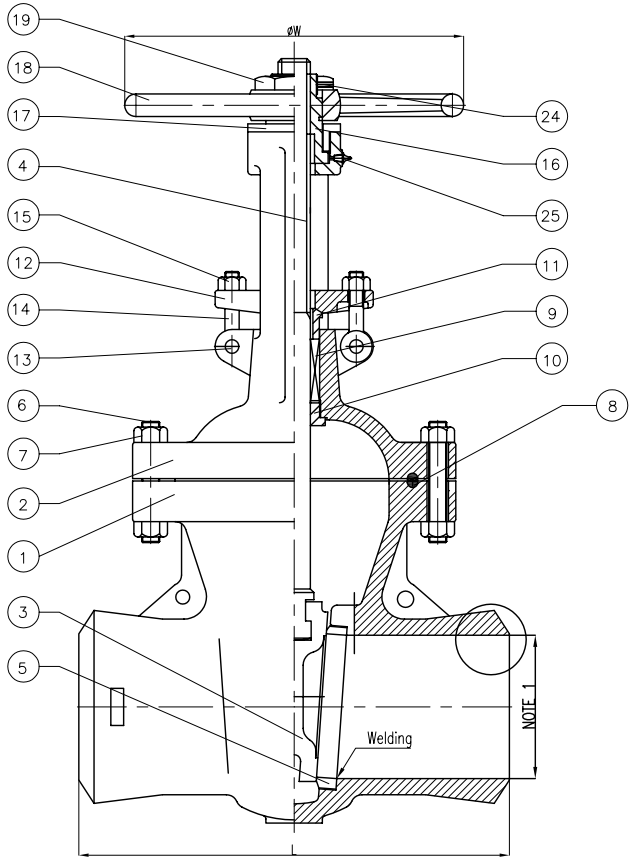

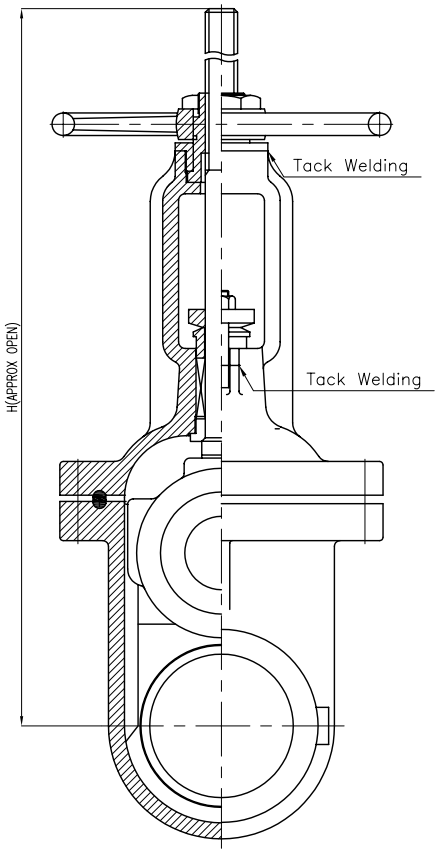

BILL OF MATERIALS			
NO.	PART NAME	MATERIALS	Q'TY
1	BODY	A216Gr WCB	1
2	BONNET	A216Gr WCB	1
3	DISC 6"&BELOW	A217Gr CA15	1
	DISC 8"&OVER	A216Gr WCB With 13Cr Welding	
4	STEM	A479Gr 410	1
5	SEAT RING	A105 With STELLITE Welding	2
6	BONNET BOLT	A193Gr B7	1SET
7	BONNET NUT	A194Gr 2H	1SET
8	GASKET	LOW CARBON STEEL	1
9	PACKING	P#6610+P#6527	1SET
10	BACK SEAT	A479Gr 410	1
11	GLAND RING	A479Gr 410	1
12	GLAND FLANGE	A105 or WCB	1
13	HINGE PIN	A105	2
14	GLAND BOLT	A307Gr B	2
15	GLAND NUT	A307Gr B	2
16	YOKE SLEEVE	A439Gr D2C	1
17	SLEEVE NUT	A307 or WCB	1
18	HAND WHEEL	A197	1
19	HANDLE NUT	A307 or WCB	1
24	SET SCREW	STEEL	1
25	GREASE NIPPLE	STEEL	1

NOTE:
1. SPECIFY PIPE SCHEDULE No. REQUIED.
2. TRIM #2, (API #8), OTHER TRIMS AVAILABLE

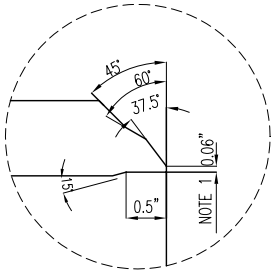

BUTTWELDING END

UNIT:INCH

SIZE	d	L	H	W
2.00	1.88	14.50	21.38	10.25
3.00	2.88	15.00	25.91	11.82
4.00	3.88	18.00	32.09	14.00
6.00	5.75	24.00	40.71	22.00
8.00	7.50	29.00	54.72	23.62
10.00	9.38	33.00	65.75	25.62
12.00	11.12	38.00	72.83	25.62
14.00	12.25	40.50	74.96	25.62
16.00	14.00	44.50	79.92	25.62
18.00	15.75	48.00	87.20	27.56
20.00	17.50	52.00	108.85	27.95
24.00	21.00	61.00	122.63	27.95

NO.	DATE	DESCRIPTION	PRP'D	REV'D	APP'D
3					
1					
0					

MARKING SYSTEM	MSS-SP-25	INSPECTION & TEST: API 598		
BUTTWELDING	ANSI B16.25	SHELL	HYDRO	3350 PSIG
FACE TO FACE	ANSI B16.10	SEAT	HYDRO	2450 PSIG
WALL THICKNESS	API 600		AIR	80 PSIG
DESIGNED	API 600		SCALE	NONE

WILLIAMS VALVE CORPORATION

TITLE CAST STEEL GATE VALVE OS&Y BUTTWELD END

CLASS 900 LB		MATERIAL : WCB	
SIZE	Fig #	DRAWING NO.	REV.
2"-24"	90W-2	60GA060094	01

Wm. E. Williams No. 90F2 Class 900 OS&Y Gate Valve ASTM A 216 WCB (API Trim 8)

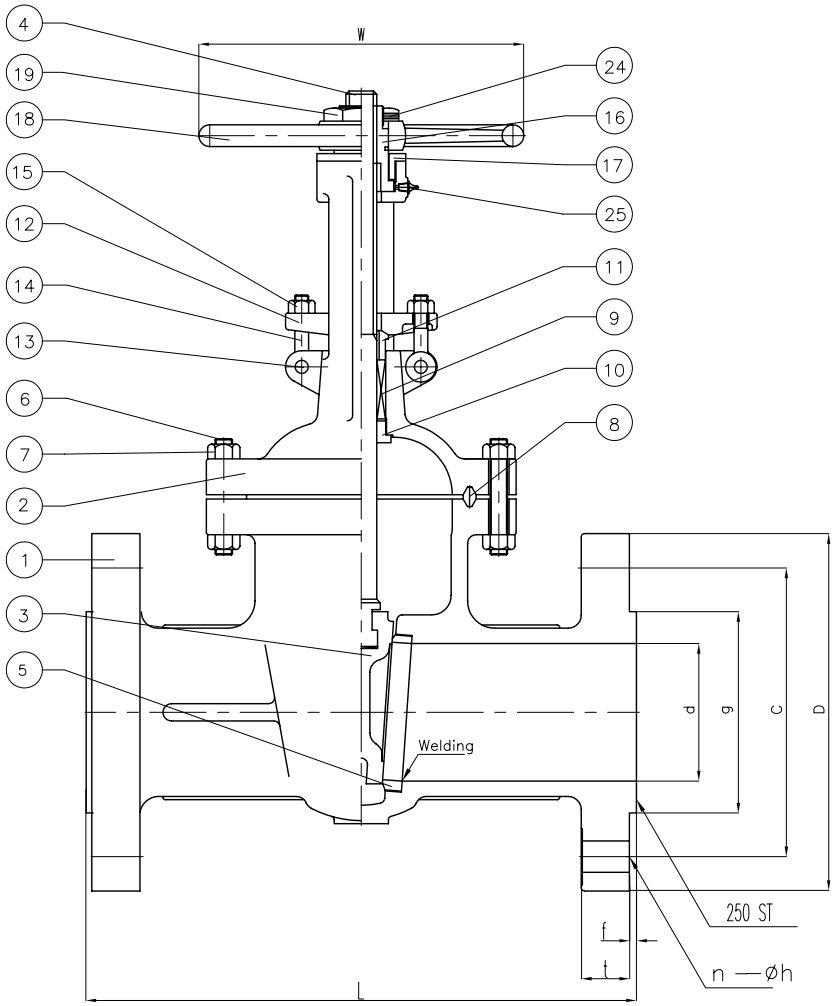

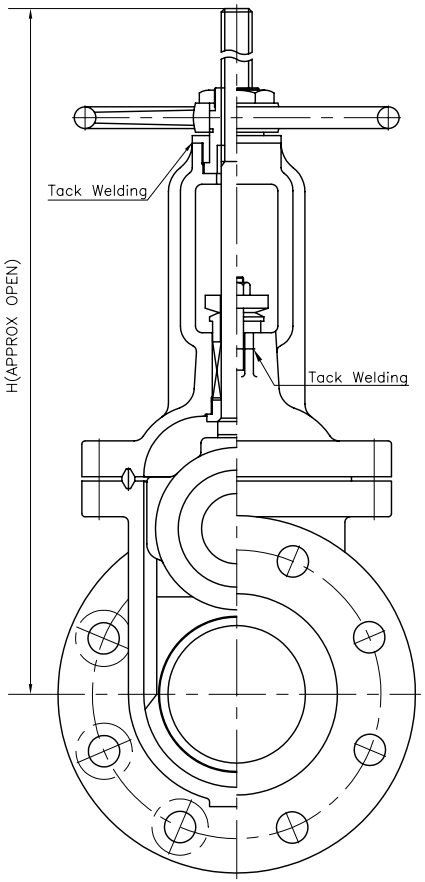

BILL OF MATERIALS

NO.	PART NAME		MATERIALS	Q'TY
1	BODY		A216Gr WCB	1
2	BONNET		A216Gr WCB	1
3	DISC	6"&BELOW	A217Gr CA15	1
		8"&OVER	A216Gr WCB With 13Cr Welding	
4	STEM		A479Gr 410	1
5	SEAT RING		A105 With STELLITE Welding	2
6	BONNET BOLT		A193Gr B7	1SET
7	BONNET NUT		A194Gr 2H	1SET
8	GASKET		P#1500	1
9	PACKING		P#6610+P#6528	1SET
10	BACK SEAT		A479Gr 410	1
11	GLAND RING		A479Gr 410	1
12	GLAND FLANGE		A105 or WCB	1
13	HINGE PIN		A105 or 410	2
14	GLAND BOLT		A307Gr B	2
15	GLAND NUT		A307Gr B	2
16	YOKE SLEEVE		A439Gr D2C	1
17	SLEEVE NUT		A479Gr 410 or WCB	1
18	HAND WHEEL		A197	1
19	HANDLE NUT		A479Gr 410 or WCB	1
20	YOKE		A216 Gr WCB	1
21	YOKE BOLT		A307Gr B	4
22	YOKE BOLT NUT		A307 Gr B	4
23	BEARING		STEEL	2
24	SET SCREW		STEEL	1
25	GREASE NIPPLE		STEEL	1

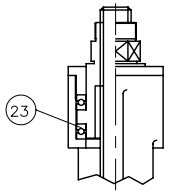

THRUST BALL BEARINGS
6" AND ABOVE

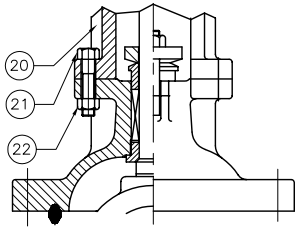

TWO PIECE BONNET
10" AND ABOVE

UNIT:INCH

SIZE	d	L	D	C	g	t	f	n−h	H	W
2.00	1.88	14.50	8.50	6.50	3.62	1.50	0.250	8−1.00	26.00	10.25
3.00	2.88	15.00	9.50	7.50	5.00	1.50	0.250	8−1.00	31.50	11.82
4.00	3.88	18.00	11.50	9.25	6.18	1.75	0.250	8−1.25	35.50	14.00
6.00	5.75	24.00	15.50	12.50	8.50	2.19	0.250	12−1.25	44.75	22.00
8.00	7.50	29.00	18.50	15.50	10.63	2.50	0.250	12−1.50	56.62	23.62
10.00	9.38	33.00	21.50	18.50	12.75	2.75	0.250	16−1.50	61.25	25.62
12.00	11.12	38.00	24.00	21.00	15.00	3.12	0.250	20−1.50	67.50	25.62
14.00	12.25	40.50	25.25	22.00	16.25	3.38	0.250	20−1.62	75.00	25.62
16.00	14.00	44.50	27.75	24.25	18.50	3.50	0.250	20−1.73	79.92	25.62
18.00	15.75	48.00	31.00	27.00	21.00	4.00	0.250	20−2.00	87.20	27.56
20.00	17.50	52.00	33.00	29.50	23.00	4.25	0.250	20−2.12	108.85	27.95
24.00	21.00	61.00	41.00	35.50	27.25	5.50	0.250	20−2.62	122.63	27.95

MARKING SYSTEM	MSS−SP−25	INSPECTION & TEST: API 598		
DIM.OF FLANGE	ANSI B16.5	SHELL	HYDRO	3350PSI
FACE TO FACE	ANSI B16.10	SEAT	AIR	80PSI
WALL THICKNESS	API 600	BACK SEAT	HYDRO	2450PSI
DESIGNED	API 600, ANSI B16.34			

NO.	DATE	DESCRIPTION	PRP'D	REV'D	APP'D
2					
1		Rechecked Dim			
0		ISSUED FOR PROPOSAL			

WILLIAMS VALVE CORPORATION

TITLE CAST STEEL GATE VALVE
CLASS 900 R,F. B,B. OS&Y.

SCALE	Fig #	DRAWING NO.	REV.
NONE	90F2	60GA060093	01

Wm. E. Williams No. 150W2 Class 1500 BW OS&Y Gate Valve ASTM A 216 WCB (API Trim 8)

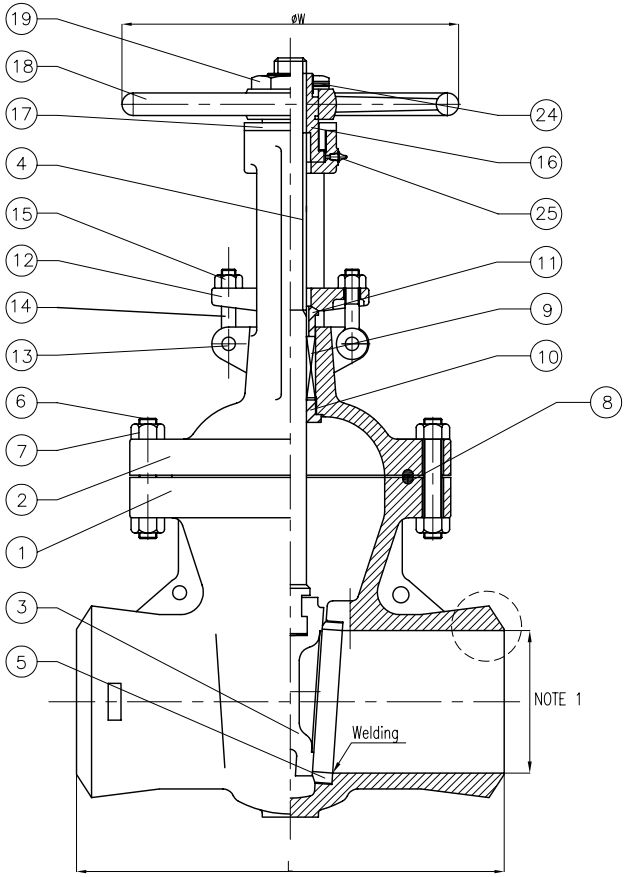

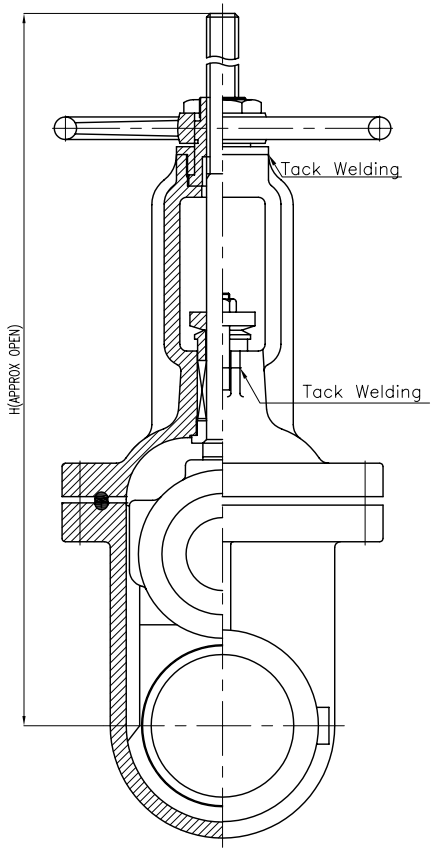

BILL OF MATERIALS			
NO.	PART NAME	MATERIALS	Q'TY
1	BODY	A216Gr WCB	1
2	BONNET	A216Gr WCB	1
3	DISC 6"&BELOW	A217Gr CA15	1
	DISC 8"&OVER	A216Gr WCB With 13Cr Welding	
4	STEM	A479Gr 410	1
5	SEAT RING	A105 With STELLITE Welding	2
6	BONNET BOLT	A193Gr B7	1SET
7	BONNET NUT	A194Gr 2H	1SET
8	GASKET	LOW CARBON STEEL	1
9	PACKING	P#6610+P#6527	1SET
10	BACK SEAT	A479Gr 410	1
11	GLAND RING	A479Gr 410	1
12	GLAND FLANGE	A105 or WCB	1
13	HINGE PIN	A105	2
14	GLAND BOLT	A307Gr B	2
15	GLAND NUT	A307Gr B	2
16	YOKE SLEEVE	A439Gr D2C	1
17	SLEEVE NUT	A307 or WCB	1
18	HAND WHEEL	A197	1
19	HANDLE NUT	A307 or WCB	1
24	SET SCREW	STEEL	1
25	GREASE NIPPLE	STEEL	1

NOTE:
1. SPECIFY PIPE SCHEDULE No. REQUIED.
2. TRIM #2, (API #8), OTHER TRIMS AVAILABLE

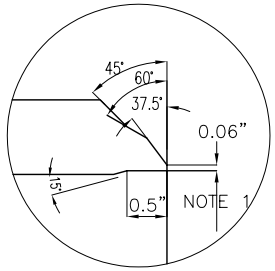

BUTTWELDING END

UNIT:INCH

SIZE	d	L	H	W
2.00	1.88	14.50	22.40	11.81
3.00	2.75	16.50	30.31	15.75
4.00	3.62	21.00	32.01	17.72
6.00	5.38	27.75	46.38	19.69
8.00	7.00	32.00	51.85	17.72
10.00	8.75	39.00	66.61	22.05
12.00	10.38	44.50	82.68	27.95
14.00	11.38	49.50	86.02	27.95
16.00	13.00	54.50	95.67	27.95
18.00	14.62	60.50	107.9	31.50
20.00	16.38	65.00	121.5	31.50
24.00	19.62	76.50	146.1	31.50

NO.	DATE	DESCRIPTION	PRP'D	REV'D	APP'D
2					
1					
0					

MARKING SYSTEM	MSS-SP-25	INSPECTION & TEST: API 598		
BUTTWELDING	ANSI B16.25	SHELL	HYDRO	5575 PSIG
FACE TO FACE	ANSI B16.10	SEAT	HYDRO	4080 PSIG
WALL THICKNESS	API 600		AIR	80 PSIG
DESIGNED	API 600		SCALE	NONE

WILLIAMS VALVE CORPORATION

TITLE CAST STEEL GATE VALVE OS&Y BUTTWELD END

CLASS 1500 LB		MATERIAL: WCB	
SIZE	Fig #	DRAWING NO.	REV.
2"–24"	150W-2	60GA060088	01