Wm. E. Williams No. N30F2 Class 300 RF NRS Gate Valve ASTM A 216 WCB (API Trim 8)

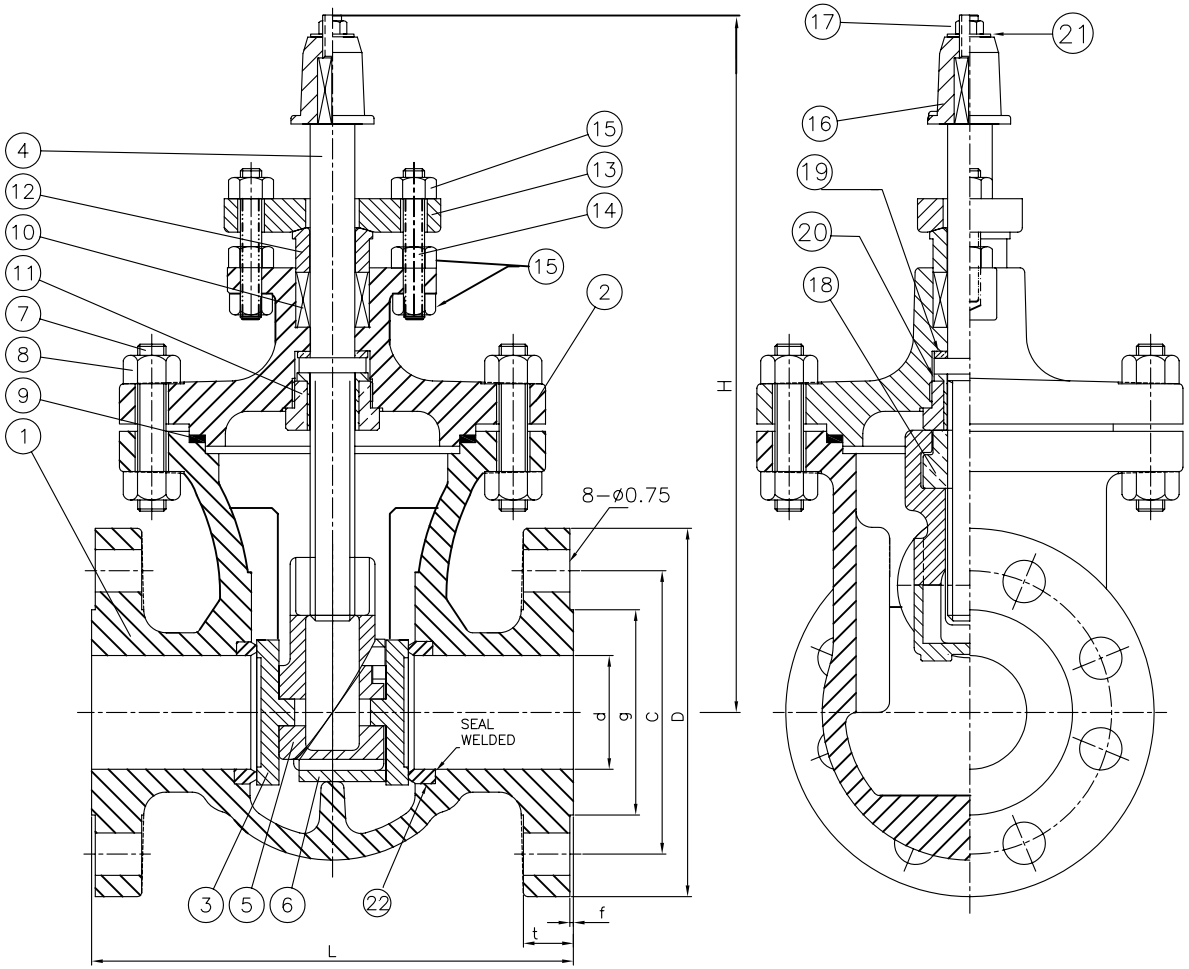

NO.	PART NAME	MATERIAL	Q'TY	REMARK
1	BODY	A216-WCB	1	NOTE 6.
2	BONNET	A216-WCB	1	
3	DISC	A216-WCB (HARD FACE)	2	NOTE 6.
4	STEM	A276-410	1	
5	UPPER WEDGE	A217 -CA15	1	NOTE 7.
6	LOWER WEDGE	A217-CA15	1	NOTE 7.
7	BONNET BOLT	A193-B7	1SET	
8	BONNET NUT	A194-2H	1SET	
9	GASKET	304HOOP+GRAPHITE	1	SPIRAL WOUND
10	PACKING	PTFE-CHEVRON RING	1	OR EQUIVALENT
11	RETAINER	A276-410	1	
12	GLAND	B148-C95800	1	AL-BRONZE
13	GLAND FLANGE	A216-WCB	1	
14	GLAND STUD	A193-B7	2	
15	GLAND BOLT NUT	A194-2H	4	
16	OPERATING NUT	A108-1020	1	NOTE 8
17	HEX NUT	A194-2H	1	
18	STEM BUSH	B148-C95800	1	AL-BRONZE
19	THRUST WASHER	B148-C95800	2	AL-BRONZE
20	THRUST BUSH	B148-C95800		AL-BRONZE
21	WASHER	A576-1020	1	
22	SEAT RING	A105 WITH STELLITE		

NOTE

1. WALL THICKNESS : API 600 CLASS 300
2. FACE TO FACE DIMENSIONS : ANSI B16.10 CLASS 300
3. END FLANGE DIMENSIONS : ANSI B16.5 CLASS 300
4. CON EDISON.SPEC. S.9020,REV.8
5. VALVE TESTS : API 598
6. BODY AND DISC SEATING SURFACES : STELLITE HARD FACING
7. CONTACTING SURFACES OF LOWER WEDGE STELLITE HARD FACING. UPPER WEDGE Cr-13. (HB-270)
8. THE OPERATING NUT PER CON EDISON DWG. EO-17028-0. EDISON OPERATION WRENCH.

UNIT:INCH

SIZE	d	L	D	C	g	t	f	n-h	H	No OF TURNS
2.00	2.00	8.50	6.50	5.00	3.63	0.88	0.060	8-0.75	13.00	13
3.00	3.00	11.12	8.25	6.625	5.00	1.12	0.060	8-0.87	14.75	21
4.00	4.00	12.00	10.00	7.875	6.18	1.25	0.060	8-0.87	17.25	18
6.00	6.00	15.88	12.50	10.63	8.50	1.44	0.060	12-0.87	21.25	20
8.00	8.00	16.50	15.00	13.00	10.62	1.62	0.060	12-1.00	26.50	26
10.00	10.00	18.00	17.50	15.25	12.75	1.88	0.060	16-1.12	30.75	34
12.00	12.00	19.75	20.50	17.75	15.00	2.00	0.060	16-1.25	36.00	39

THE STEM TURNS FROM FULLY OPEN TO FULLY CLOSED POSITION.

TEST PRESSURE			
	SHELL	HYD.	1125 psig (79 kg/cm²)
	SEAT	HYD.	825 psig (58 kg/cm²)
		AIR	80 psig (6 kg/cm²)

REV. NO.	DATE	DESCRIPTION	PRE'D	CHK'D	APP'D
3					
2					
1	04/10/03	CHANGED GLAND MATERIAL AL-BRONZE.	Ming		
0	07/18/02	INITIAL ISSUE	Ming		

ILLIAMS
VALVE CORPORATION

TITLE
DOUBLE DISC NRS GATE VALVE
UNDERGROUND STEAM SYSTEM

MATERIAL: WCB	CLASS: 300 LB	SIZE: 2"-12"	
SCALE N/S	UNIT INCH	Fig No. N30F-2	DWG No. 60GA060087

William. E. Williams No.N15F2, N15F4, N15F4-AB Class 150 WCB, NRS Gate Valve ASTM A 216

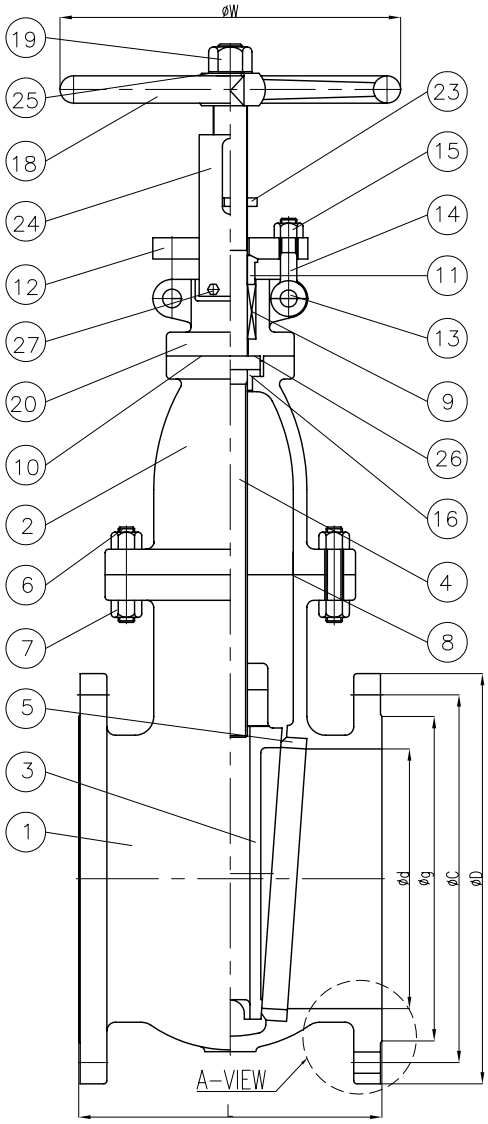

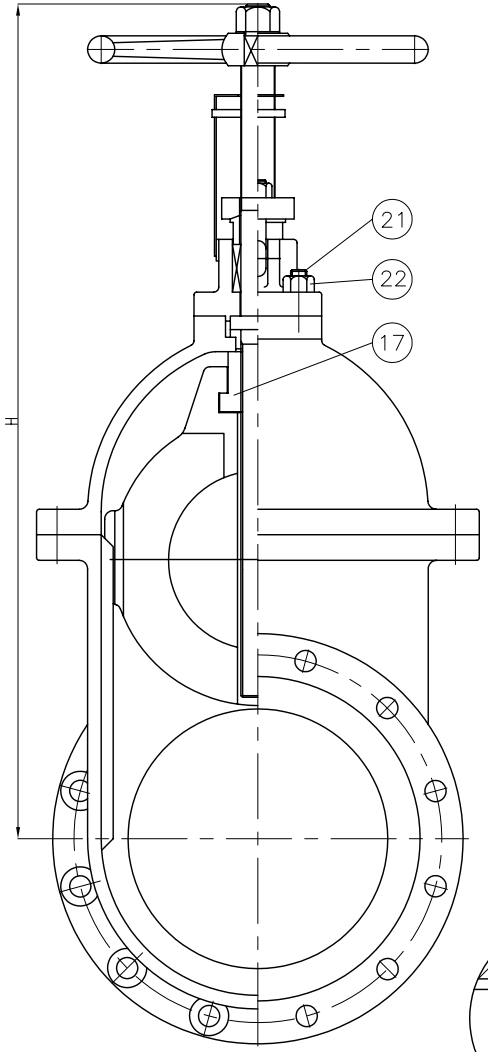

BILL OF MATERIALS

NO.	PART NAME	N15F2 API TRIM 8 (410/HF)	N15F4 BRONZE TRIM	NF15F4-AB ALUM-BRZ TRIM	Q'TY
1	BODY	A216Gr WCB	A216Gr WCB	A216Gr WCB	1
2	BONNET	A216Gr WCB	A216Gr WCB	A216Gr WCB	1
3	DISC	WCB 216 Co-CrA STEL. HF	WCB WITH BRONZE FACE	WCB W/B148 FACE	1
4	STEM	A479Gr 410 SS	ASTM B124	B148-C95500	1
5	SEAT RING	A105N WITH ASTM B62 FACE	A105 WITH ASTM B62 FACE	A105 W/B148 FACE	2
6	BONNET BOLT	A193Gr B7	A193Gr B7	A193Gr B7	1SET
7	BONNET NUT	A194Gr 2H	A194Gr 2H	A194Gr 2H	1SET
8	BONNET GASKET	P#1400G	P#1400G	P#1400G	1
9	PACKING	P#6610+P#6528	P#6610+P#6528	P#6610+P#6528	1SET
10	P/BOX GASKET	TBA#2100	TBA#2100	TBA#2100	1
11	GLAND RING	A479Gr 410	A479Gr 410	A479Gr 410	1
12	GLAND FLANGE	A105 or WCB	A105 or WCB	A105 or WCB	1
13	HINGE PIN	A105 or 410 SS	A105 or 410	A105	2
14	GLAND BOLT	A307Gr B	A307Gr B	A307Gr B	2
15	GLAND NUT	A307Gr B	A307Gr B	A307Gr B	2
16	THRUST BUSH	410 SS	ALUM-BRZ-B148	ALUM-BRZ-B148	1
17	STEM NUT	D42	BRONZE	ALUM-BRZ B148 C95500	1
18	HAND WHEEL	A197	A197	A197	1
19	HANDLE NUT	A307Gr B	A307Gr B	A307Gr B	1
20	PACKING BOX	A216Gr WCB	A216Gr WCB	A216Gr WCB	1
21	BOX BOLT	A307Gr B	A307Gr B	A307Gr B	4
22	BOX NUT	A307Gr B	A307Gr B	A307Gr B	4
23	INDICATOR	STEEL	STEEL	STEEL	2
24	INDICATOR PLATE	STEEL	STEEL	STEEL	1
25	HANDLE WASHER	STEEL	STEEL	STEEL	1
26	THRUST WASHER	410	ALUM-BRZ-B148	ALUM-BRZ-B148	1
27	PLATE BOLT	A307Gr B	A307Gr B	A307Gr B	2

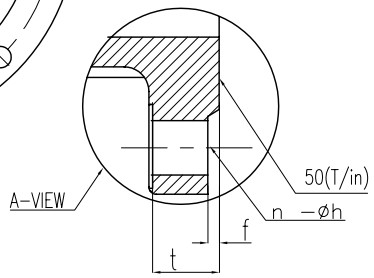

UNIT: Inch

SIZE	d	L	H	W	D	C	g	t	f	n-h
2.00	2.00	7.00	13.93	7.00	6.00	4.75	3.62	0.625	0.060	4-0.75
3.00	3.00	8.00	16.75	7.87	7.50	6.00	5.00	0.750	0.060	4-0.75
4.00	4.00	9.00	20.94	8.81	9.00	7.50	6.18	0.940	0.060	8-0.75
6.00	6.00	10.50	21.50	12.00	11.00	9.50	8.50	1.000	0.060	8-0.86
8.00	8.00	11.50	26.50	13.97	13.50	11.75	10.62	1.125	0.060	8-0.86
10.00	10.00	13.00	31.00	15.75	16.00	14.25	12.75	1.187	0.060	12-1.00
12.00	12.00	14.00	36.25	17.75	19.00	17.00	15.00	1.250	0.060	12-1.00
14.00	13.25	15.00	41.69	17.75	21.00	18.75	16.25	1.375	0.060	12-1.12
16.00	15.25	16.00	44.87	19.87	23.50	21.25	18.50	1.437	0.060	16-1.12

MARKING SYSTEM	MSS-SP-25	INSPECTION & TEST: API 598		
DIM.OF FLANGE	ANSI B16.5	SHELL	HYDRO	450PSI
FACE TO FACE	ANSI B16.10	SEAT	AIR	80PSI
WALL THICKNESS	API 600	BACK SEAT	HYDRO	315PSI
OVERALL	API 600, ANSI B16.34			

NO.	DATE	DESCRIPTION	PRP'D	REV'D	APP'D
2					
1					
0	10/06	AB TRIM			

WILLIAMS VALVE CORPORATION

TITLE NRS GATE VALVE CLASS 150

SCALE	Fig #	DRAWING NO.	REV.
NONE	SEE ABOVE	38GA060299	0

Wm. E. Williams No. N30W2 Class 300 NRS Gate Valve ASTM A 216 WCB (API Trim 8)

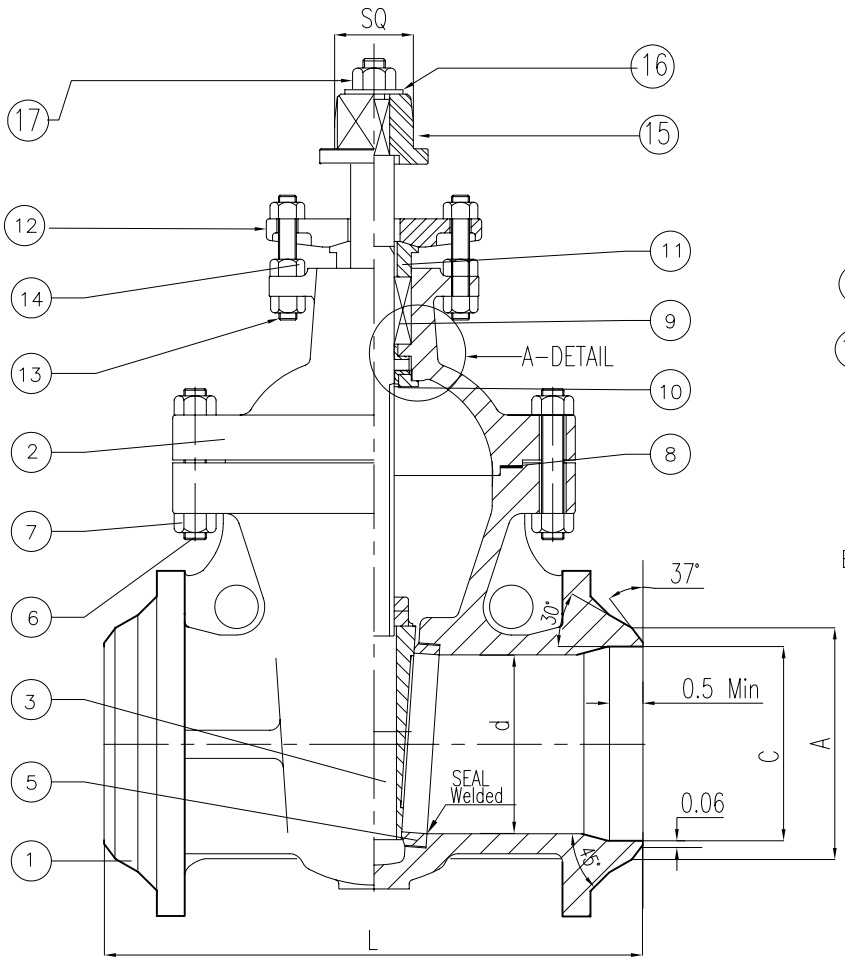

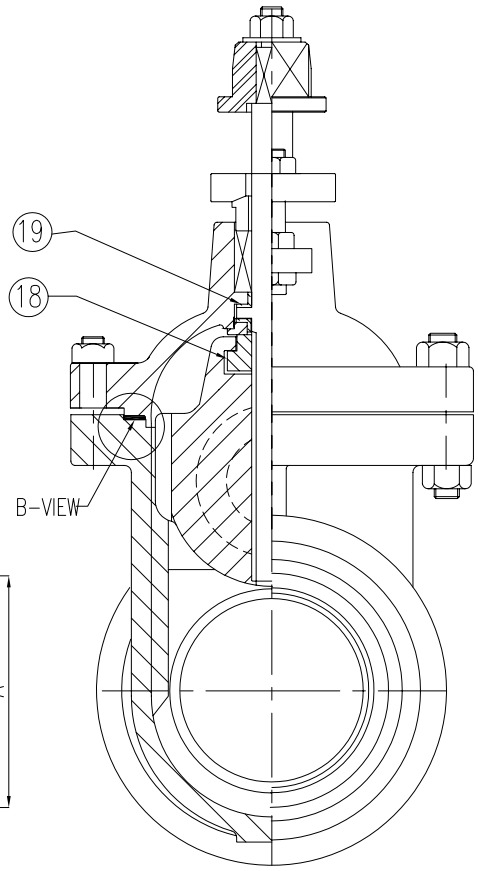

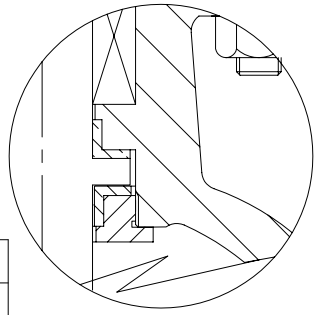

A-DETAIL

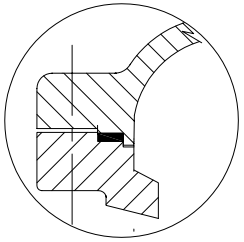

B-VIEW
CAPTURE GASKET

BILL OF MATERIALS

NO.	PART NAME	MATERIALS	Q'TY
1	BODY	A216 Gr WCB	1
2	BONNET	A216 Gr WCB	1
3	DISC	A216 Gr WCB W/Co-Cr A FACE	1
4	STEM	A479Gr 410	1
5	SEAT RING	A105 H/F CO-Cr A	2
6	BONNET BOLT	A193 Gr B7	1SET
7	BONNET NUT	A194 Gr 2H	1SET
8	GASKET	S.S 304 HOO W/GRAPHIE	1
9	PACKING	PTFE-CHEVRON RING	1SET
10	RETAINER	A479Gr 410	1
11	PACKING GLAND	B505 C95400 AL-BRONZE	1
12	GLAND FLANGE	A216 Gr WCB	1
13	GLAND STUD	A193 Gr B7	2
14	GLAND STUD NUT	A194 Gr 2H	1 SET
15	SQUARE NUT	A197	1
16	WASHER	S.S 316 (EXTRA THICK)	1
17	LOCKING NUT	A194 Gr 2H	1
18	STEM NUT	B505 C95400 AL-BRONZE	1
19	BUSHING	B505 C95400 AL-BRONZE	2

UNIT:INCH

SIZE	d	L	H	A	C
2.00	2.00	8.50	16.50	2.38	2.075
2.50	2.50	9.50	17.50	2.96	2.497
3.00	3.00	11.12	20.70	3.59	3.081
4.00	4.00	12.00	22.83	4.62	4.044
5.00	5.00	15.00	28.22	5.69	5.070
6.00	6.00	15.88	32.00	6.78	6.094
8.00	8.00	16.50	38.70	8.78	8.020
10.00	10.00	18.00	46.81	10.94	10.07
12.00	12.00	19.75	54.72	12.97	12.05
14.00	13.25	30.00	63.00	14.25	13.194
16.00	15.25	33.00	72.83	16.25	15.085
18.00	17.00	36.00	80.31	18.28	16.975
20.00	19.00	39.00	86.50	20.31	18.920
24.00	23.00	45.00	110.75	24.38	22.755

UNIT:INCH

SIZE	d	L	H	SQ	A	C
16.00	15.25	33.00	72.83	2.125	16.25	15.084
20.00	19.00	39.00	86.50	2.625	20.00	18.920

NO.	DATE	DESCRIPTION	PRP'D	REV'D	APP'D
2					
1					
0		ISSUED FOR PROPOSAL			

MARKING SYSTEM	MSS-SP-25	INSPECTION & TEST: API 598		
BUTTWELDING END	ANSI B16.25	SHELL	HYDRO	1125PSI
FACE TO FACE	ANSI B16.10	SEAT	AIR	80PSI
WALL THICKNESS	API 600	BACK SEAT	HYDRO	825PSI
DESIGNED	API 600, ANSI B16.34			

WILLIAMS
VALVE CORPORATION

TITLE CAST STEEL BUTTWELDING END CLASS 300 NRS. GATE VALVE

SCALE	Fig #	DRAWING NO.	SCHEDULE	REV.
NONE	N30W-2	60GA060177	40	01