WILLIAM E. WILLIAMS VALVE CORPORATION

Forged Valves

WILLIAM E. WILLIAMS VALVE CORPORATION
Phone: 1-800-221-1115
718-392-1660
Fax: 718-729-5106
Email: wew@williamsvalve.com

Table of Contents

Ordering Information 3

Introduction 4

Forged Steel Gate Valves 5

- Forged Steel Gate Valve 800 lb
- Forged Steel Gate Valve 1500 lb

Forged Steel Globe Valves 8

- Forged Steel Globe Valve 800 lb
- Forged Steel Globe Valve 1500 lb

Forged Steel Check Valves 11

- 800 lb Piston Check Valve
- 1500 lb Piston Check Valve
- 800 lb and 1500 lb Swing Check Valves

Forged Steel Cryogenic Valves 15

- 800 lb Cryogenic Gate Valves
- 800 lb Cryogenic Globe Valves

Forged Steel Extended Body Valves 18

- 800 lb Extended Body Gate

Forged Steel Bellows Seal Valves 20

- 800 lb Bellows Seal Globe Valves

Forged Steel Flanged End Valves 22

- 150-600 lb Flanged End Gate Valve
- Flanged End Gate Valve 1500 lb
- Flanged End Globe Valve
- Flanged End Globe Valve 1500 lb
- Flanged End Check Valves
- Flanged End Check Valve 1500 lb

800 lb Y-Pattern Globe Valve 29

1500 lb & 2500 lb Y-Pattern Globe Valves 30

Phone: 1-800-221-1115
718-392-1660
Fax: 718-729-5106
Email: wew@williamsvalve.com

Ordering Information

A	B	C	D	E	F	G	H
SIZE	PREFIX	WILLIAMS NUMBER - Indicating PRESSURE/PORT/VALVE TYPE	END	TRIM	BODY	BONNET	ACCESSORIES

A

Size
3/8"
3/4"
1/2"
1"
1 1/4"
1 1/2"
2"
2 1/2"
3"

B

BODY MATERIAL	
Prefix	Material
F	Forged steel
FS	Forged stainless and alloys

C

WILLIAMS NUMBERS PRESSURE RATING/PORT/TYPE	
Code	Explanation
15	150 class, conventional port, gate
17	150 class, full port, gate
30	300 class, conventional port, gate
37	300 class, full port, gate
60	600 class, conventional port, gate
67	600 class, full port, gate
80	800 class ,conventional port, gate
87	800 class, full port, gate
150	1500 class ,conventional port, gate
157	1500 class, full port, gate
151	150 class, conventional port, swing check
301	300 class, conventional port, swing check
601	600 class, conventional port, swing check
801	800 class, conventional port, swing check
1501	1500 class, conventional port, swing check
151L	150 class, conventional port, piston check
301L	300 class, conventional port, piston check
601L	600 class, conventional port, piston check
801L	800 class, conventional port, piston check
1501L	1500 class, conventional port, piston check
152	150 class, conventional port, globe
302	300 class, conventional port, globe
602	600 class, conventional port, globe
802	800 class, conventional port, globe
1502	1500 class, conventional port, globe

D

AVAILABLE END CONNECTIONS	
Code	Connection Type
T	Threaded
W	Butt weld
SW	Socket weld
R	Ring type joint
F	Flanged

E

AVAILABLE TRIMS	
Code	API Number
3	5
2	8
5	9
62	12

F

AVAILABLE BODY MATERIAL		
Code	ASTM	Material
Default	A105 N	Carbon steel
F2	A350 LF2	Low-temp carbon
F3	A350 LF3	Low-temp carbon
F5	A182 F5	Cr alloy steel
F6	A182 F6	Cr alloy steel
F9	A182 F9	Cr alloy steel
F11	A182 F11	Cr-Mo alloy steel
F22	A182 F22	Cr-Mo alloy steel
F91	A182 F91	Cr-Mo alloy steel
304	A182 F304	Stainless steel
304L	A182 F304L	Stainless steel
316	A182 F316	Stainless steel
316L	A182 F316L	Stainless steel
321	A182 F321	Stainless steel
347	A182 F347	Stainless steel
		Monel
Also available:		Inconel
		Hastelloy

G

AVAILABLE BONNET TO BODY CONNECTIONS	
Code	Connection Type
default	Bolted bonnet
WB	Welded bonnet
PS	Pressure Seal

H

ACCESSORIES	
Bellows Seals	BS
Extended Body	EB
Cryogenic Valves	CRY

Example:
1 1/4″ F80T-2
1 1/4″, 800 class, gate valve, threaded ends, API trim 8,body A105N, bolted bonnet

Phone: 1-800-221-1115
718-392-1660
Fax: 718-729-5106
Email: wew@williamsvalve.com

Introduction

Founded in 1918, William E Williams Valve Corporation has continuously produced high quality valves for industrial and commercial applications including:

Oil refining, chemical processing, power generation, mining, paper, pharmaceutical processes, as well as, commercial and military shipbuilding.

Product improvements exceeding the latest environmental standards are constantly being implemented. Recently we initiated a totally contained bonnet gasket design, which, with our standard stem packing, exceeds most fugitive emission requirements.

Williams' valves are designed, manufactured and tested to meet and exceed all applicable specifications to which they are constructed. Our goal is to produce high quality valves, fully traceable, at prices competitive in the global marketplace and deliveries to match the "just in time" requirements of today's business world. In order to accomplish this goal, we maintain large inventories of finished products to support our distribution network.

All products are completely traceable to chemical, physical and pressure test records. Additional non-destructive testing is offered where specified.

We have years of experience working on special requirements: electric, hydraulic or pneumatic automation, gear operators emergency shut-off valves, soft seats and discs, by-pass valve installations and extended bonnets.

We believe that William E. Williams has a record of quality equal to or better than any in the valve industry. We are a privately owned company whose accomplishments have been achieved by the dedication and commitment of our employees to provide a standard of excellence in all our products for you, our present and future customers.

This forged valve catalog is intended to provide an overview of our forged products and shows the continued growth of our available product lines.

We appreciate your business and want to be your primary valve source.

Sincerely,
William E. Williams Valve Corporation

Richard Sherman
President

Forged Steel Gate Valves

Williams valves are available in three bonnet designs:

1. Bolted Bonnet, with male-female joint, spiral wound gasket, made in F304L/graphite. Ring joint gasket is also available on request.
2. Welded Bonnet, with a threaded and seal welded joint. On request a full penetration welded joint is available.
3. Pressure Seal Bonnet, with a threaded and pressure seal bonnet joint.

Gate Valve Design Construction and Specifications

Williams valves conform to API 602, BS 5352, and ASME B 16.34.
They are tested according to API 598, and marked as per MSS SP-25

Construction is as follows:

- Full Port or Standard Port
- Outside Screw and Yoke (OS&Y)
- Two piece self aligning packing gland
- Bolted Bonnet with spiral-wound gasket, threaded and seal welded bonnet or threaded and pressure seal bonnet.
- Integral backseat
- Socket Weld Ends to ASME B16.11
- Screwed Ends (NPT) to ANSI/ASME B1.20.1

WILLIAM E. WILLIAMS VALVE CORPORATION
Phone: 1-800-221-1115
718-392-1660
Fax: 718-729-5106
Email: wew@williamsvalve.com

Forged Steel Gate Valve 800 lb

Bolted Bonnet

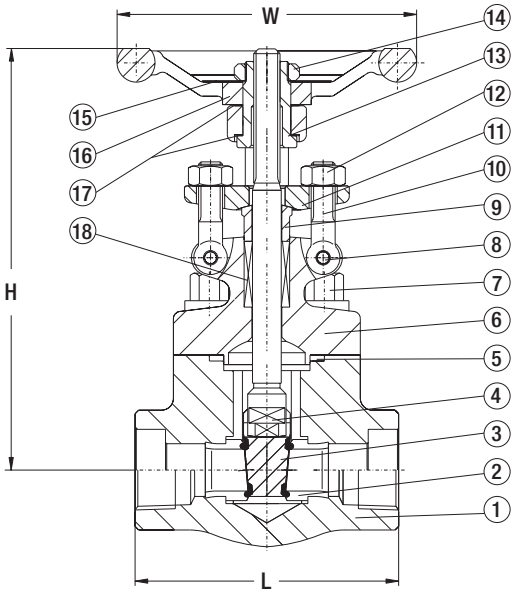

Welded Bonnet

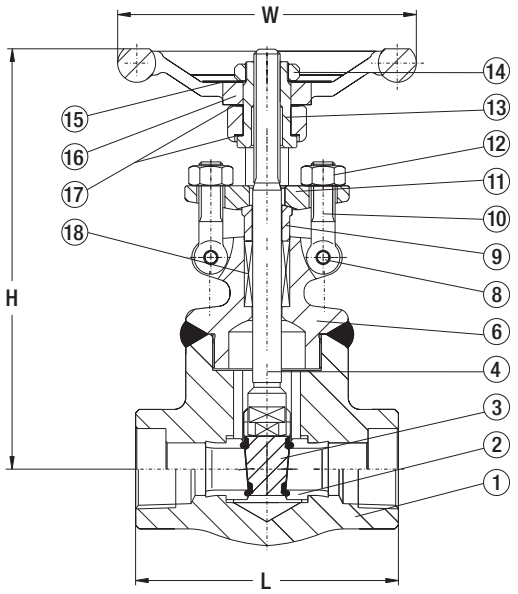

F80T (Conv. Port) **F80SW** (Conv. Port)
F87T (Full Port) **F87SW** (Full. Port)

F80T-WB (Conv. Port) **F80SW-WB** (Conv. Port)
F87T-WB (Full Port) **F87SW-WB** (Full Port)

Material Specifications NO.	Part Name	ASTM Type A105	ASTM Type F22	ASTM Type F304(L)	ASTM Type F316(L)
1	Body	A105N	A182 F22	A182 F304(L)	A182 F316(L)
2	Seat Ring	A276 420	A276 304	A276 304(L)	A276 316(L)
3	Wedge	A276 430 & 410	A182 F304	A182 F304(L)	A182 F316(L)
4	Stem	A182 F6	A182 F304	A182 F304(L)	A182 F316(L)
5	Gasket	Corrugated SS + Graphite	Corrugated SS + Graphite	SS+PTFE	SS+PTFE
6	Bonnet	A105	A182 F22	A182 F304(L)	A182 F316(L)
7	Bonnet Bolt	A193 B7	A193 B16	A193 B8	A193 B8M
8	Pin	A276 420	A276 420	A182 F304	A182 F304
9	Gland	A276 410	A276 410	A182 F304(L)	A182 F316(L)
10	Gland Eyebolt	A193 B7	A193 B16	A193 B8	A193 B8M
11	Gland Flange	A105	A182 F11	A182 F304(L)	A182 F316(L)
12	Gland Nut	A194 2H	A1944	A1948	A1948M
13	Yoke Nut	A276 420	A276 420	A276 420	A276 420
14	H.W. Lock Nut	A194 2H	A1944	A1948	A1948M
15	Nameplate	SS	SS	SS	SS
16	Handwheel	A197	A197	A197	A197
17	Bearing Gasket	A473 431	A473 431	A473 431	A473 431
18	Stem Packing	Flexible Graphite	Flexible Graphite	PTFE	PTFE

Note: Other materials are available upon request.

Dimensions (in) and Weights (lb)

NPS	Conv. / Full	3/8	1/2	3/4	1	1-1/4	1-1/2	2	
			3/8	1/2	3/4	1	1-1/4	1-1/2	2
L		3.11	3.11	3.62	4.37	4.72	4.72	5.51	7.01
H (OPEN)		6.22	6.22	6.65	7.76	9.29	9.69	11.14	12.99
W		3.94	3.94	3.94	4.92	6.30	6.30	7.09	7.87
Weights	Bolted	4.63	4.41	5.07	9.48	13.01	15.21	24.48	33.52
	Welded	3.97	3.75	4.41	8.38	11.25	13.45	22.49	31.31

WILLIAM E. WILLIAMS VALVE CORPORATION
Phone: 1-800-221-1115
718-392-1660
Fax: 718-729-5106
Email: wew@williamsvalve.com

Forged Steel Gate Valve 1500 lb

Bolted Bonnet

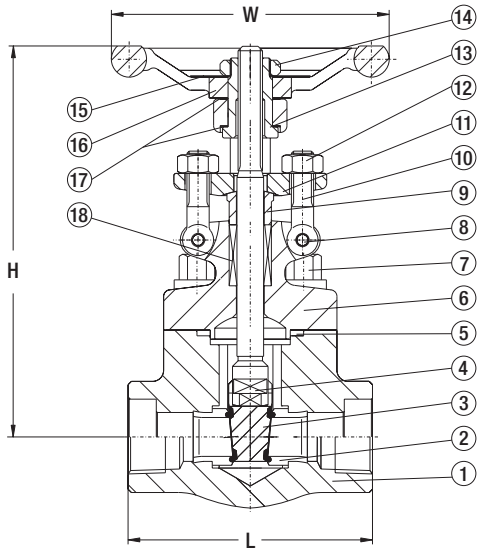

F150T (Conv. Port) **F150SW** (Conv. Port)
F157T (Full Port) **F157SW** (Full. Port)

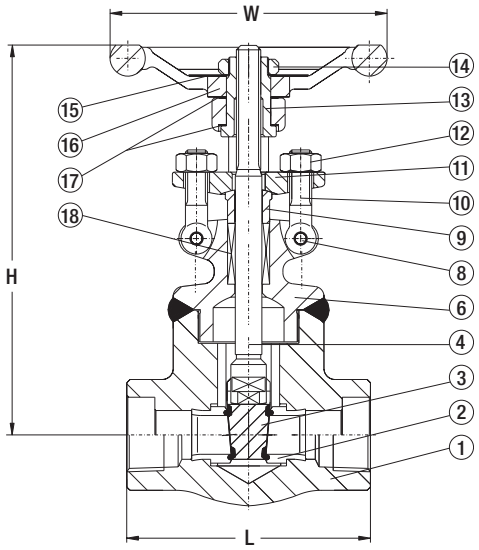

Welded Bonnet

F150T-WB (Conv. Port) **F150SW-WB** (Conv. Port)
F157T-WB (Full Port) **F157SW-WB** (Full Port)

Material Specifications NO.	Part Name	ASTM Type A105	ASTM Type F22	ASTM Type F304(L)	ASTM Type F316(L)
1	Body	A105	A182 F22	A182 F304(L)	A182 F316(L)
2	Seat Ring	A276 420	A276 304	A276 304(L)	A276 316(L)
3	Wedge	A276 430 & 410	A182 F304	A182 F304(L)	A182 F316(L)
4	Stem	A182 F6	A182 F304	A182 F304(L)	A182 F316(L)
5	Gasket	Corrugated SS + Graphite	Corrugated SS + Graphite	SS+PTFE	SS+PTFE
6	Bonnet	A105	A182 F22	A182 F304(L)	A182 F316(L)
7	Bonnet Bolt	A193 B7	A193 B16	A193 B8	A193 B8M
8	Pin	A276 420	A276 420	A182 F304	A182 F304
9	Gland	A276 410	A276 410	A182 F304(L)	A182 F316(L)
10	Gland Eyebolt	A193 B7	A193 B16	A193 B8	A193 B8M
11	Gland Flange	A105	A182 F11	A182 F304(L)	A182 F316(L)
12	Gland Nut	A194 2H	A1944	A1948	A1948M
13	Yoke Nut	A276 420	A276 420	A276 420	A276 420
14	H.W. Lock Nut	A194 2H	A1944	A1948	A1948M
15	Nameplate	SS	SS	SS	SS
16	Handwheel	A197	A197	A197	A197
17	Bearing Gasket	A473 431	A473 431	A473 431	
18	Stem Packing	Flexible Graphite	Flexible Graphite	PTFE	PTFE
	Suitable Medium	W.O.G. etc.	W.O.G. etc.	HNO_3, CH_3OOH etc	HNO_3, CH_3OOH etc
	Suitable Temperature	-29°C~425°C	-29°C~550°C	-29°C~180°C	-29°C~180°C

Note: Other materials are available upon request.

Dimensions (in) and Weights (lb)

NPS	Conv.	3/8	1/2	3/4	1	1-1/4	1-1/2	2	
	Full		3/8	1/2	3/4	1	1-1/4	1-1/2	2
L		3.62	4.37	4.37	4.72	4.72	5.51	7.01	8.27
H (OPEN)		6.65	7.76	7.76	9.29	9.69	11.14	12.99	13.94
W		3.94	4.92	4.92	6.30	6.30	7.09	7.87	9.45
Weights	Bolted	5.51	9.48	9.26	14.55	19.40	27.56	37.93	51.82
	Welded	5.29	9.26	8.82	13.89	19.18	26.68	37.93	48.51

Forged Steel Globe Valves

Williams valves are available in three bonnet designs:

1. Bolted Bonnet, with male-female joint, spiral wound gasket, made in F304L/graphite. Ring joint gasket is also available on request.
2. Welded Bonnet, with a threaded and seal welded joint. On request a full penetration welded joint is available.
3. Pressure Seal Bonnet, with a threaded and pressure seal bonnet joint.

Globe Valve Design Construction and Specifications

Williams valves conform to API 602, BS 5352, and ASME B 16.34.
They are tested according to API 598, and marked as per MSS SP-25

Construction is as follows:

- Full Port or Standard Port
- Outside Screw and Yoke (OS&Y)
- Two piece self aligning packing gland
- Bolted Bonnet with spiral-wound gasket, threaded and seal welded bonnet or threaded and pressure seal bonnet.
- Integral backseat
- Loose solid disc
- Socket Weld Ends to ASME B16.11
- Screwed Ends (NPT) to ANSI/ASME B1.20.1

Phone: 1-800-221-1115
718-392-1660
Fax: 718-729-5106
Email: wew@williamsvalve.com

Forged Steel Globe Valve 800 lb

Bolted Bonnet

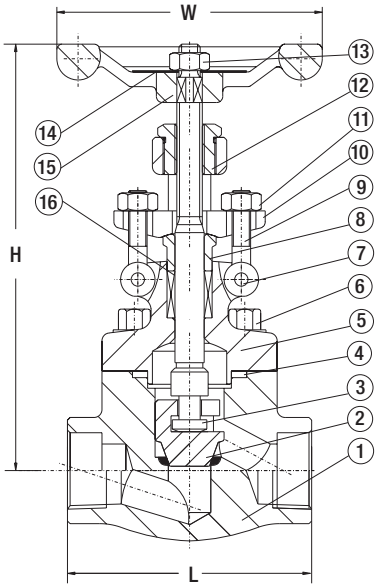

F802T (Threaded)
F802SW (Socket Weld)

Welded Bonnet

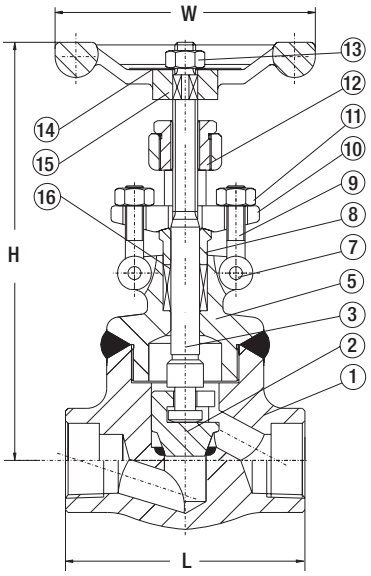

F802T-WB (Threaded)
F802SW-WB (Socket Weld)

Material Specifications NO.	Part Name	ASTM Type A105	ASTM Type F22	ASTM Type F304(L)	ASTM Type F316(L)
1	Body	A105	A182 F22	A182 F304(L)	A182 F316(L)
2	Disc	A276 420	A276 304	A276 304(L)	A276 316(L)
3	Stem	A182 F6	A182 F304	A182 F304(L)	A182 F316(L)
4	Gasket	Corrugated SS + Graphite	Corrugated SS + Graphite	SS+PTFE	SS+PTFE
5	Bonnet	A105	A276 304	A276 304(L)	A276 316(L)
6	Bonnet Bolt	A193 B7	A193 B16	A193 B8	A193 B8M
7	Pin	A276 420	A276 420	A276 304	A276 304
8	Gland	A276 410	A276 410	A182 F304(L)	A182 F316(L)
9	Gland Eyebolt	A193 B7	A193 B16	A193 B8	A193 B8M
10	Gland Flange	A216 WCB	A216 WCB	A351 CF8	A351 CF8
11	Gland Nut	A194 2H	A194 4	A194 8	A194 8M
12	Yoke Nut	A276 410	A276 410	A276 410	A276 410
13	H.W. Nut	A194 2H	A194 4	A194 8	A194 8M
14	Nameplate	SS	SS	SS	SS
15	Handwheel	A197	A197	A197	A197
16	Stem Packing	Flexible Graphite	Flexible Graphite	PTFE	PTFE
	Suitable Medium	W.O.G. etc.	W.O.G. etc.	HNO_3, CH_3OOH etc	HNO_3, CH_3OOH etc
	Suitable Temperature	-29°C~425°C	-29°C~550°C	-29°C~180°C	-29°C~180°C

Note: Other materials are available upon request.

Dimensions (in) and Weights (lb)

NPS	Conv.	1/2	3/4	1	1-1/4	1-1/2	2
L		3.00	3.15	4.00	4.50	5.75	6.25
H (OPEN)		6.00	6.25	7.75	8.50	9.25	11.00
W		4.00	4.00	5.00	6.25	6.25	7.00
Weights	Bolted	4.19	4.63	7.72	13.23	16.54	25.14
	Welded	3.75	4.19	7.28	11.47	14.99	23.37

WILLIAM E. WILLIAMS VALVE CORPORATION
Phone: 1-800-221-1115
718-392-1660
Fax: 718-729-5106
Email: wew@williamsvalve.com

Forged Steel Globe Valve 1500 lb

Bolted Bonnet

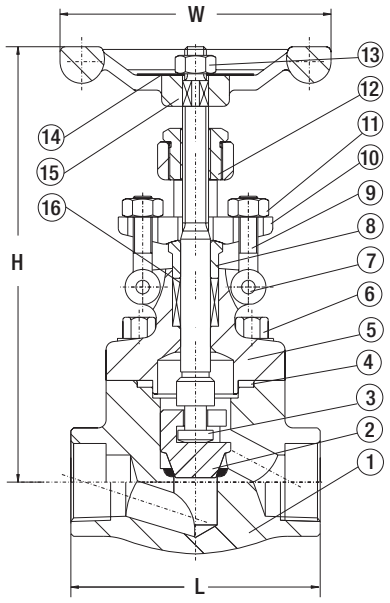

F1502T (Threaded)
F1502SW (Socket Weld)

Welded Bonnet

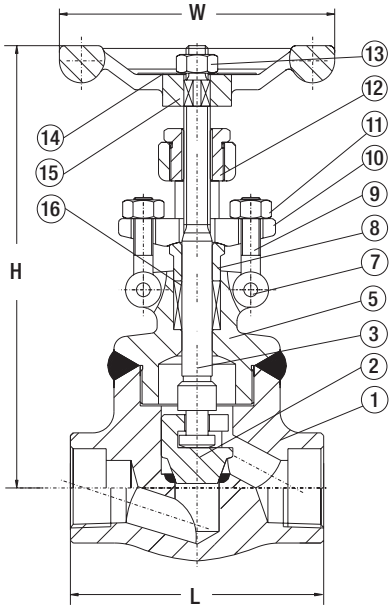

F1502T-WB (Threaded)
F1502SW-WB (Socket Weld)

Material Specifications NO.	Part Name	ASTM Type A105	ASTM Type F22	ASTM Type F304(L)	ASTM Type F316(L)
1	Body	A105	A182 F22	A182 F304(L)	A182 F316(L)
2	Disc	A276 420	A276 304	A276 304(L)	A276 316(L)
3	Stem	A182 F6	A182 F304	A182 F304(L)	A182 F316(L)
4	Gasket	Corrugated SS + Graphite	Corrugated SS + Graphite	SS+PTFE	SS+PTFE
5	Bonnet	A105	A276 304	A276 304(L)	A276 316(L)
6	Bonnet Bolt	A193 B7	A193 B16	A193 B8	A193 B8M
7	Pin	A276 420	A276 420	A276 304	A276 304
8	Gland	A276 410	A276 410	A182 F304(L)	A182 F316(L)
9	Gland Eyebolt	A193 B7	A193 B16	A193 B8	A193 B8M
10	Gland Flange	A216 WCB	A216 WCB	A351 CF8	A351 CF8
11	Gland Nut	A194 2H	A194 4	A194 8	A194 8M
12	Yoke Nut	A276 410	A276 410	A276 410	A276 410
13	H.W. Nut	A194 2H	A194 4	A194 8	A194 8M
14	Nameplate	SS	SS	SS	SS
15	Handwheel	A197	A197	A197	A197
16	Stem Packing	Flexible Graphite	Flexible Graphite	PTFE	PTFE
	Suitable Medium	W.O.G. etc.	W.O.G. etc.	HNO_3, CH_3OOH etc	HNO_3, CH_3OOH etc
	Suitable Temperature	-29°C~425°C	-29°C~550°C	-29°C~180°C	-29°C~180°C

Note: Other materials are available upon request.

Dimensions (in) and Weights (lb)

NPS	Conv.	3/8	1/2	3/4	1	1-1/4	1-1/2	2
L		3.11	3.11	3.62	4.37	4.72	5.98	6.77
H (OPEN)		6.54	6.54	6.73	8.15	9.45	10.16	12.99
W		3.94	3.94	3.94	4.92	6.30	6.30	7.09
Weights	Bolted	4.19	4.19	4.63	7.72	13.23	16.54	25.14
	Welded	3.75	3.75	4.19	7.28	11.47	14.99	23.37

Forged Steel Check Valves

Williams valves are available in three bonnet designs:

1. Bolted Bonnet, with male-female joint, spiral wound gasket, made in F304L/graphite. Ring joint gasket is also available on request.
2. Welded Bonnet, with a threaded and seal welded joint. On request a full penetration welded joint is available.
3. Pressure Seal Bonnet, with a threaded and pressure seal bonnet joint.

The check valves are also available in three different design configurations: Piston check, ball check or swing check designs.

Check Valve Design Construction and Specifications

Williams valves conform to MSS-SP-118, and ASME B 16.34.
They are tested according to API 598, and marked as per MSS SP-25

Construction is as follows:

- Full Port or Standard Port
- Piston Check
- Ball Check
- Swing Check
- Spring available on request
- Bolted Bonnet with spiral-wound gasket, threaded and seal welded bonnet or threaded and pressure seal bonnet.
- Socket Weld Ends to ASME B16.11
- Screwed Ends (NPT) to ANSI/ASME B1.20.1

WILLIAM E. WILLIAMS VALVE CORPORATION
Phone: 1-800-221-1115
718-392-1660
Fax: 718-729-5106
Email: wew@williamsvalve.com

800 lb Piston Check Valve

Bolted Bonnet

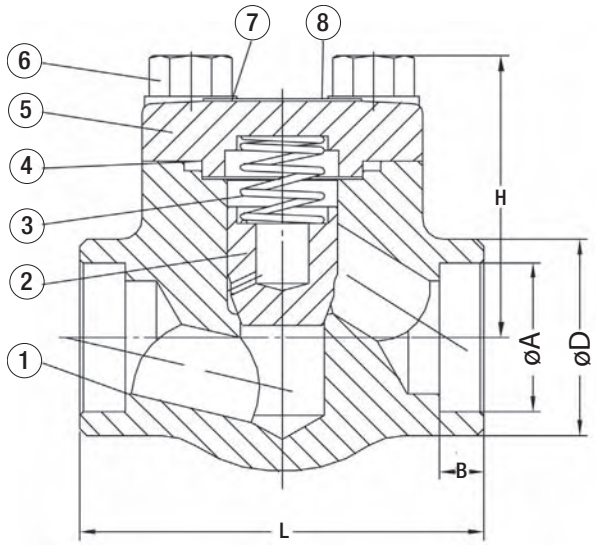

F801LT (Threaded)
F801LSW (Socket Weld)

Welded Bonnet

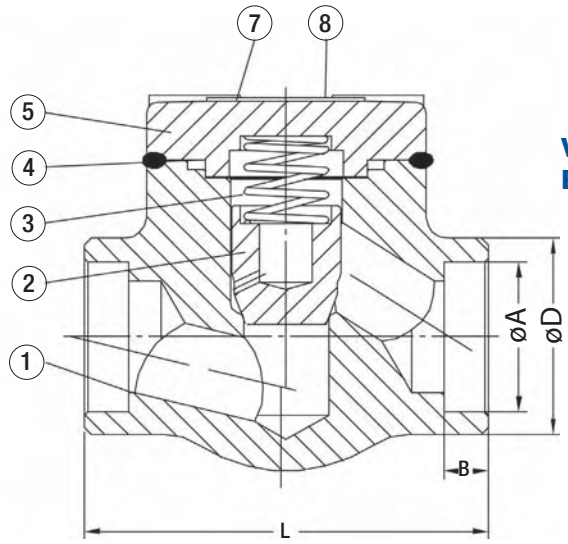

F801LT-WB (Threaded)
F801LSW-WB (Socket Weld)

Material Specifications NO.	Part Name	ASTM Type A105	ASTM Type F22	ASTM Type F304(L)	ASTM Type F316(L)
1	Body	A105	A182 F22	A182 F304(L)	A182 F316(L)
2	Piston Disc	A276 410	A276 304	A276 304(L)	A276 316(L)
3	Spring	17-4PH	17-4PH	17-4PH	17-4PH
4	Gasket	Corrugated SS + Graphite	Corrugated SS + Graphite	SS+PTFE	SS+PTFE
5	Bonnet	A105	A182 F22	A182 F304(L)	A182 F316(L)
6	Bolt	A193 B7	A193 B16	A193 B8M	A193 B8(M)
7	Nameplate	SS	SS	SS	SS
8	Drive Screw	SS	SS	SS	SS
	Suitable Medium	W.O.G. etc.	W.O.G. etc.	HNO_3, CH_3OOH etc	HNO_3, CH_3OOH etc
	Suitable Temperature	-29°C~425°C	-29°C~550°C	-29°C~180°C	-29°C~180°C

Dimensions (in) and Weights (lb)

NPS	Conv.	3/8	1/2	3/4	1	1-1/4	1-1/2	2	
	Full		3/8	1/2	3/4	1	1-1/4	1-1/2	2
L		3.11	3.11	3.62	4.37	4.72	5.98	6.77	7.87
H		2.40	2.40	2.56	3.11	3.74	4.06	4.65	5.20
Weights	Bolted	3.09	2.65	3.31	6.84	8.60	12.35	19.62	27.56
	Welded	2.43	2.21	2.65	6.39	7.28	10.80	17.86	24.03

WILLIAM E. WILLIAMS VALVE CORPORATION
Phone: 1-800-221-1115
718-392-1660
Fax: 718-729-5106
Email: wew@williamsvalve.com

1500 lb Piston Check Valve

Bolted Bonnet

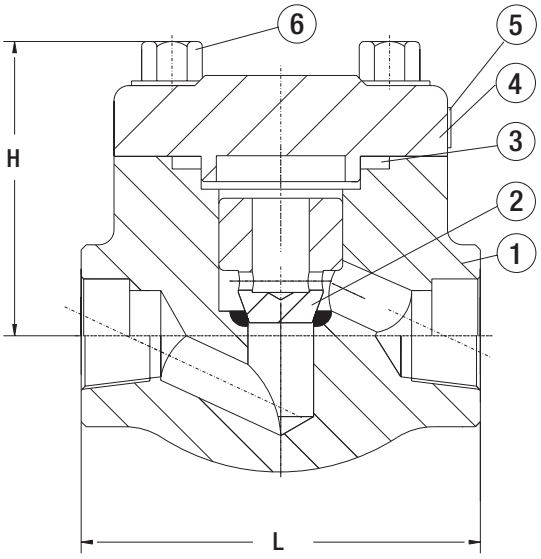

F1501LT (Threaded)
F1501LSW (Socket Weld)

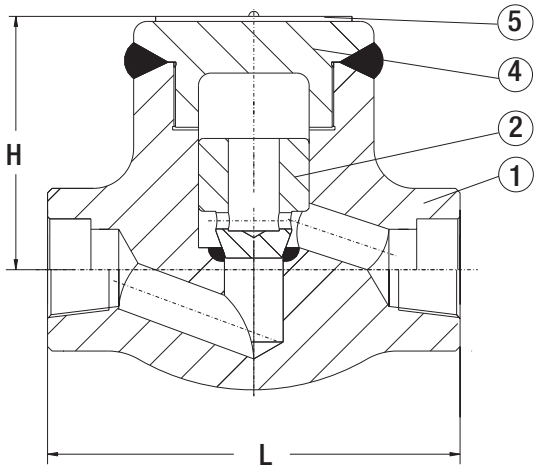

Welded Bonnet

F1501LT-WB (Threaded)
F1501LSW-WB (Socket Weld)

Material Specifications NO.	Part Name	ASTM Type A105	ASTM Type F22	ASTM Type F304(L)	ASTM Type F316(L)
1	Body	A105	A182 F22	A182 F304(L)	A182 F316(L)
2	Piston Disc	A276 420	A276 304	A276 304(L)	A276 316(L)
3	Gasket	Corrugated SS + Graphite	Corrugated SS + Graphite	SS+PTFE	SS+PTFE
4	Bonnet	A105	A182 F22	A182 F304(L)	A182 F316(L)
5	Nameplate	SS	SS	SS	SS
6	Bolt	A193 B7	A193 B16	A193 B8M	A193 B8(M)
	Suitable Medium	W.O.G. etc.	W.O.G. etc.	HNO_3, CH_3OOH etc	HNO_3, CH_3OOH etc
	Suitable Temperature	-29°C~425°C	-29°C~550°C	-29°C~180°C	-29°C~180°C

Note: Other materials are available upon request.

Dimensions (in) and Weights (lb)

NPS	Conv. / Full	3/8	1/2	3/4	1	1-1/4	1-1/2	2	
			3/8	1/2	3/4	1	1-1/4	1-1/2	2
L		3.62	4.37	4.37	4.72	5.98	6.77	7.87	7.87
H		2.56	3.11	3.11	3.82	4.09	4.72	5.47	8.46
Weights	Bolted	3.53	7.50	7.28	12.13	13.23	20.29	28.44	35.72
	Welded	2.87	7.06	6.84	10.58	11.91	18.74	24.70	31.53

WILLIAM E. WILLIAMS VALVE CORPORATION
Phone: 1-800-221-1115
718-392-1660
Fax: 718-729-5106
Email: wew@williamsvalve.com

800 lb and 1500 lb Swing Check Valves

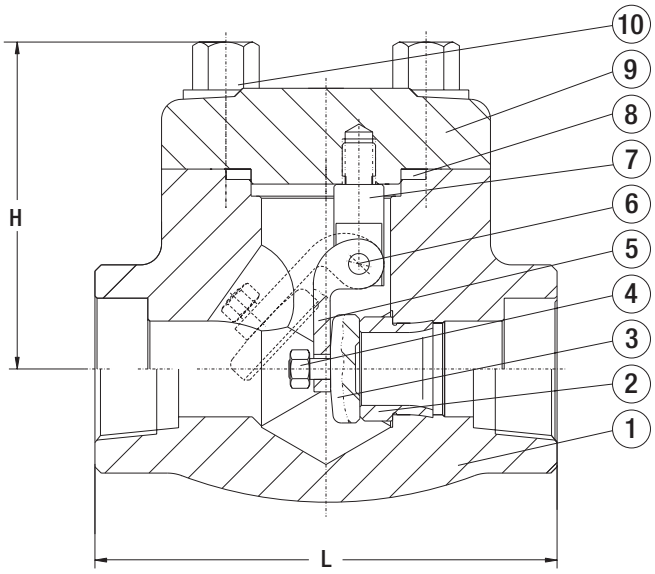

F801T (Threaded) 800 lb **F801SW** (Socket Weld)
F1501T (Threaded) 1500 lb **F1501SW** (Socket Weld)

Material Specifications NO.	Part Name	ASTM Type A105	ASTM Type F22	ASTM Type F304(L)	ASTM Type F316(L)
1	Body	A105	A182 F22	A182 F304(L)	A182 F316(L)
2	Seat	A276 410	A276 304	A276 304(L)	A276 316(L)
3	Swing Disc	A276 420	A276 304	A276 304(L)	A276 316(L)
4	Nut	A194 2H	A194 4	A194 8	A194 8M
5	Hinge	A105	A182 F22	A182 F304 L	A182 F316(L)
6	Pin	A276 420	A276 420	A182 F304	A182 F316
7	Pontlevis	A105	A182 F22	A182 F304 L	A182 F316(L)
8	Gasket	Corrugated SS+graphite	Corrugated SS+graphite	SS+PTFE	SS+PTFE
9	Bonnet	A105	A182 F22	A182 F304 L	A182 F316(L)
10	Bolt	A193 B7	A193 B16	A193 B8M	A193 B8M
	Suitable Medium	W.O.G. etc.	W.O.G. etc.	HNO_3, CH_3OOH etc	HNO_3, CH_3OOH etc
	Suitable Temperature	-20°C~425°C	-29°C~550°C	-29°C~180°C	-29°C~180°C

Note: Other materials are available upon request.

Dimensions (in) and Weights (lb)

NPS		3/8	1/2	3/4	1	1-1/4	1-1/2	2
L	800#	3.11	3.11	3.62	4.37	4.72	4.72	5.51
	900-1500#	3.62	4.37	4.37	4.72	4.72	5.51	7.01
H	800#	2.40	2.40	3.07	3.31	3.98	4.72	5.24
	900-1500#	3.11	3.11	3.11	3.82	4.13	4.72	5.51
Weights	800#	2.43	2.21	4.19	8.60	9.92	16.10	22.05
	900-1500#	6.84	6.62	7.94	9.48	13.45	19.40	27.78

Forged Steel Cryogenic Valves

Williams cryogenic valves are available in two bonnet designs:

1. Bolted Bonnet, with male-female joint, spiral wound gasket, made in F304L/graphite. Ring joint gasket is also available on request.
2. Welded Bonnet, with a threaded and seal welded joint. On request a full penetration welded joint is available.

The cryogenic valves are available in gate and globe configurations. Valves are designed with an extended bonnet for use in cold services to -320 degrees F (-196 degrees C).

Cryogenic Valve Design Construction and Specifications

Williams cryogenic gate and globe valves conform to API 602, MSS-SP-118, and BS 6364.
They are tested according to API 598, and marked as per MSS SP-25

Construction is as follows:

- Full Port or Standard Port
- Two piece self-aligning packing gland
- Bolted Bonnet with spiral-wound gasket, threaded and seal welded bonnet or threaded and pressure seal bonnet
- Integral backseat
- Pressure relief hole on seat (for Gate Valves only)
- Socket Weld Ends to ASME B16.11
- Screwed Ends (NPT) to ANSI/ASME B1.20.1
- Special extension ends on request
- Soft seats for globe valves on request
- PTFE stem packing on request
- Special low temperature testing on request
- Outside Screw and Yoke (OS&Y)

WILLIAM E. WILLIAMS VALVE CORPORATION
Phone: 1-800-221-1115
718-392-1660
Fax: 718-729-5106
Email: wew@williamsvalve.com

800 lb Cryogenic Gate Valves

Bolted Bonnet

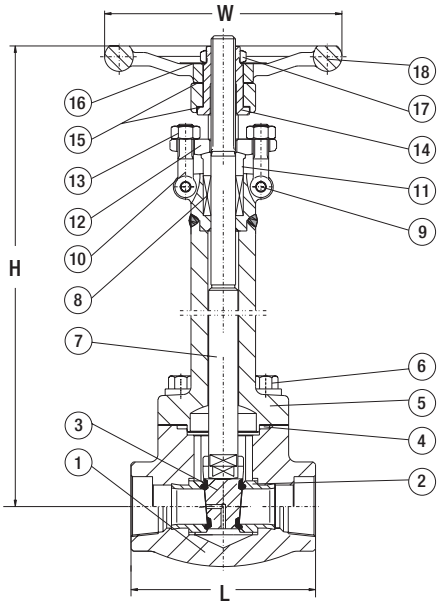

F80T-CRY (Threaded)
F80SW-CRY (Socket Weld)

Welded Bonnet

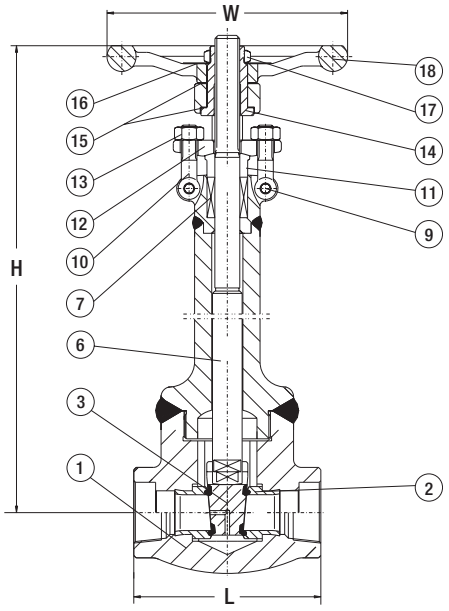

F80T-WB-CRY (Threaded)
F80SW-WB-CRY (Socket Weld)

Material Specifications NO.	Part Name	ASTM Type LF2	ASTM Type LF3	ASTM Type F304(L)	ASTM Type F316(L)
1	Body	A350 LF2	A350 LF3	A182 F304(L)	A182 F316(L)
2	Seat Ring	A276 420	A276 410	A276 304(L)	A276 316(L)
3	Wedge	A350 LF2	A350 LF3	A182 F304(L)	A182 F316(L)
4	Gasket	Corrugated SS + Graphite	Corrugated SS + Graphite	SS+PTFE	SS+PTFE
5	Bonnet	A350 LF2	A350 LF3	A182 F304(L)	A182 F316(L)
6	Bonnet Bolt	A193 B7	A193 B7	A193 B8	A193 B8M
7	Stem	A182 F6	A182 F6	A182 F304(L)	A182 F316(L)
8	Stem Packing	Flexible Graphite	Flexible Graphite	PTFE	PTFE
9	Pin	A276 420	A276 420	A276 304	A276 304
10	Gland Eyebolt	A193 B7	A193 B16	A193 B8	A193 B8M
11	Gland	A276 410	A276 410	A182 F304(L)	A182 F316(L)
12	Gland Flange	A105	A182 F11	A182 F304(L)	A182 F316(L)
13	Gland Nut	A194 2H	A194 4	A194 8	A194 8M
14	Yoke Nut	A276 420	A276 420	A276 420	A276 420
15	Bearing Gasket	A473 431	A473 431	A473 431	A473 431
16	Nameplate	SS	SS	SS	SS
17	H.W. Lock Nut	A194 2H	A194 4	A194 8	A194 8M
18	Handwheel	A197	A197	A197	A197
	Suitable Temperature	≥ -40°C	≥ -101°C	≥ -196°C	≥ -196°C

Note: Other materials are available upon request.

Dimensions (in) and Weights (lb)

NPS		3/8	1/2	3/4	1	1-1/4	1-1/2	2
L		3.11	3.62	4.37	4.72	4.72	5.51	7.01
H (OPEN)		12.99	13.11	14.17	16.02	18.70	18.70	21.69
W		3.94	3.94	4.92	6.30	6.30	7.09	7.87
Weights	Bolted	11.47	15.66	20.73	29.77	33.08	39.25	61.74
	Welded	10.58	14.11	19.18	26.90	29.55	33.52	57.33

WILLIAM E. WILLIAMS VALVE CORPORATION
Phone: 1-800-221-1115
718-392-1660
Fax: 718-729-5106
Email: wew@williamsvalve.com

800 lb Cryogenic Globe Valves

Bolted Bonnet

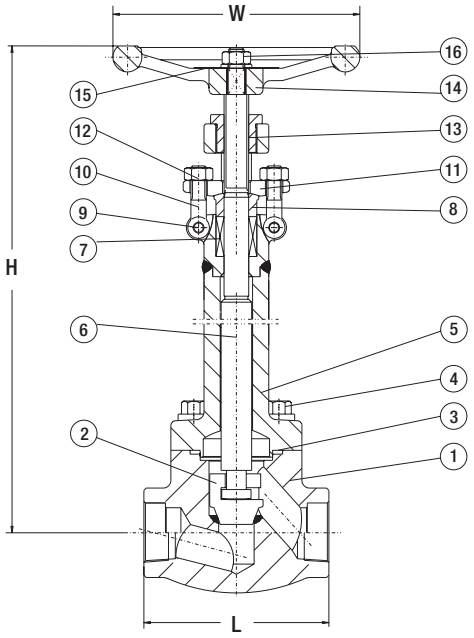

F802T-CRY (Threaded)
F802SW-CRY (Socket Weld)

Welded Bonnet

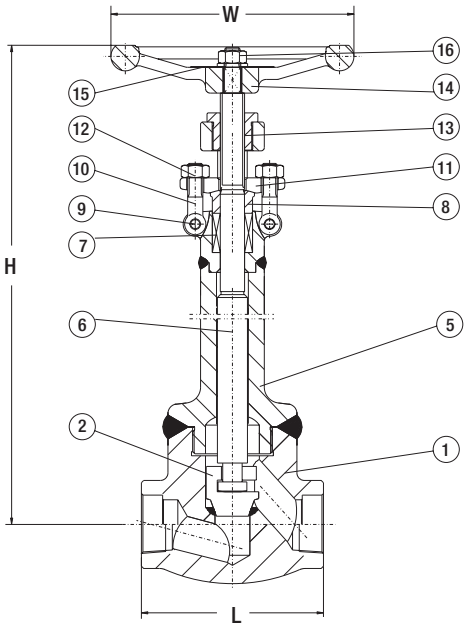

F802T-WB-CRY (Threaded)
F802SW-WB-CRY (Socket Weld)

Material Specifications NO.	Part Name	ASTM Type A350 LF2	ASTM Type A350 LF3	ASTM Type A182 F304	ASTM Type A182 F316(L)
1	Body	A350 LF2	A350 LF3	A182 F304(L)	A182 F316(L)
2	Disc	A276 410	A276 304(L)	A276 304(L)	A276 316(L)
3	Bonnet	A350 LF2	A350 LF3	A182 F304(L)	A182 F316(L)
4	Gasket	Corrugated SS + Graphite	Corrugated SS + Graphite	SS+PTFE	SS+PTFE
5	Bolt Nut	A193 B7	A193 B7	A193 B8	A193 B8M
6	Stem	A182 F6	A182 F6	A182 F304(L)	A182 F316(L)
7	Stem Packing	Flexible Graphite	Flexible Graphite	PTFE	PTFE
8	Gland	A276 420	A276 420	A182 F304	A182 F304
9	Pin	A276 420	A276 420	A182 F304	A182 F304
10	Gland Eyebolt	A193 B7	A193 B16	A193 B8	A193 B8M
11	Gland Flange	A216 WCB	A216 WCB	A351 CF8	A351 CF8
12	Gland Nut	A194 2H	A194 4	A194 8	A194 8M
13	Yoke Nut	A276 410	A276 410	A276 410	A276 410
14	Handwheel	A197	A197	A197	A197
15	Nameplate	SS	SS	SS	SS
16	Handwheel Nut	A194 2H	A194 4	A194 8	A194 8M
	Suitable Temperature	≥ -40°C	≥ -101°C	≥ -196°C	≥ -196°C

Note: Other materials are available upon request.

Dimensions (in) and Weights (lb)

NPS		3/8	1/2	3/4	1	1-1/4	1-1/2	2
L		3.11	3.62	4.37	4.72	4.72	6.77	7.87
H (OPEN)		13.11	13.27	14.57	18.90	16.14	18.66	21.50
W		3.94	3.94	4.92	6.30	6.30	7.09	7.87
Weights	Bolted	11.47	15.88	24.03	29.77	33.52	43.66	63.95
	Welded	10.58	14.33	20.95	25.36	28.89	38.59	59.09

Forged Steel Extended Body Valves

Williams extended body valves are available in two bonnet designs:

1. Bolted Bonnet, with male-female joint, spiral wound gasket, made in F304L/graphite. Ring joint gasket is also available on request.
2. Welded Bonnet, with a threaded and seal welded joint. On request a full penetration welded joint is available.

Gate and Globe Valve Design Construction and Specifications

Williams extended body valves conform to API 602 and API 606.
They are tested according to API 598, and marked as per MSS SP-25

Construction is as follows:

- Two piece self aligning packing gland
- Integral extended body with threaded, socket weld or butt weld connection
- Bolted Bonnet with spiral-wound gasket, threaded and seal welded bonnet
- Integral backseat
- Socket Weld Ends to ASME B16.11
- Screwed Ends (NPT) to ANSI/ASME B1.20.1
- Outside Screw and Yoke (OS&Y)

WILLIAM E. WILLIAMS VALVE CORPORATION
Phone: 1-800-221-1115
718-392-1660
Fax: 718-729-5106
Email: wew@williamsvalve.com

800 lb Extended Body Gate

Bolted Bonnet

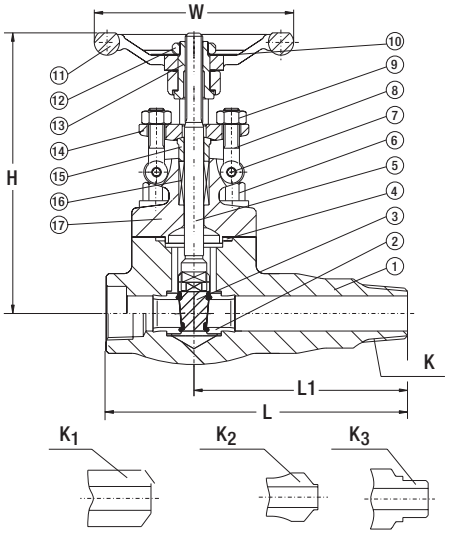

F80T-EB (Threaded)
F80SW-EB (Socket Weld)

Welded Bonnet

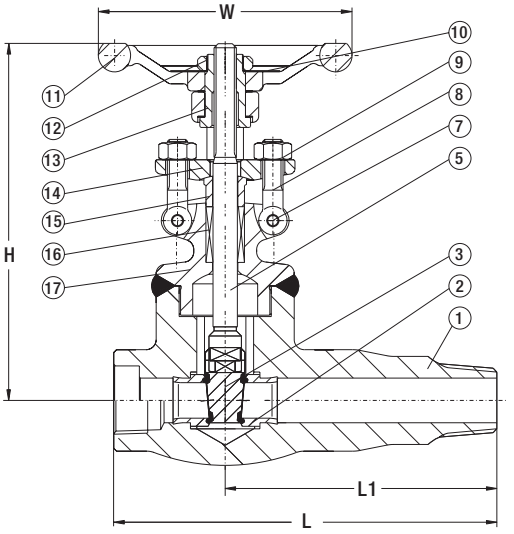

F80T-WB-EB (Threaded)
F80SW-WB-EB (Socket Weld)

Material Specifications NO.	Part Name	ASTM Type A105	ASTM Type F22	ASTM Type F304(L)	ASTM Type F316(L)
1	Body	A105	A182 F22	A182 F304(L)	A182 F316(L)
2	Seat Ring	A276 420	A276 304	A276 304(L)	A276 316(L)
3	Wedge	A276 430 & 410	A182 F304	A182 F304(L)	A182 F316(L)
4	Gasket	Corrugated SS + Graphite	Corrugated SS + Graphite	SS+PTFE	SS+PTFE
5	Stem	A182 F6	A182 F304	A182 F304(L)	A182 F316(L)
6	Bonnet Bolt	A193 B7	A193 B16	A193 B8	A193 B8M
7	Pin	A276 420	A276 420	A276 304	A276 304
8	Gland Eyebolt	A193 B7	A193 B16	A193 B8	A193 B8M
9	Gland Nut	A194 2H	A194 4	A194 8	A194 8M
10	Nameplate	SS	SS	SS	SS
11	Handwheel	A197	A197	A197	A197
12	H.W. Lock Nut	A194 2H	A194 4	A194 8	A194 8M
13	Yoke Nut	A276 420	A276 420	A276 420	A276 420
14	Gland Flange	A105	A182 F11	A182 F304(L)	A182 F316(L)
15	Gland	A276 410	A276 410	A182 F304(L)	A182 F316(L)
16	Stem Packing	Flexible Graphite	Flexible Graphite	PTFE	PTFE
17	Bonnet	A105	A182 F22	A182 F304(L)	A182 F316(L)
	Suitable Medium	W.O.G. etc.	W.O.G. etc.	HNO_3, CH_3OOH etc	HNO_3, CH_3OOH etc
	Suitable Temperature	-29°C~425°C	-29°C~550°C	-29°C~180°C	-29°C~180°C

Note: Other materials are available upon request.

Dimensions (in) and Weights (lb)

NPS	Conv. Full	3/8	1/2	3/4	1	1-1/4	1-1/2	2
			3/8	1/2	3/4	1	1-1/4	1-1/2
L1		4.23	4.23	4.23	4.72	5.00	5.00	5.98
L		5.79	5.79	6.04	6.91	7.36	7.36	8.74
H (OPEN)		6.22	6.22	6.65	7.76	9.29	9.69	11.14
W		3.94	3.94	3.94	4.92	6.30	6.30	7.09
Weights	Bolted	6.84	6.39	7.50	12.13	17.20	18.30	29.55
	Welded	6.17	5.73	6.84	11.25	16.32	16.76	26.68

Forged Steel Bellows Seal Valves

Williams bellows seal valves are available in two bonnet designs:

1. Bolted Bonnet, with male-female joint, spiral wound gasket, made in F304L/graphite. Ring joint gasket is also available on request.
2. Welded Bonnet, with a threaded and seal welded joint. On request a full penetration welded joint is available.

Globe Valve Design Construction and Specifications

Williams bellows sealed valves conform to API 602, MSS-SP-118, BS5352 and ANSI B16.34
They are tested according to API 598, and marked as per MSS SP-25

Construction is as follows:

- Two piece self aligning packing gland
- Bolted Bonnet with spiral-wound gasket, threaded and seal welded bonnet
- Integral backseat
- Socket Weld Ends to ASME B16.11
- Screwed Ends (NPT) to ANSI/ASME B1.20.1
- Outside Screw and Yoke (OS&Y)
- Grease nipple for stem

WILLIAM E. WILLIAMS VALVE CORPORATION
Phone: 1-800-221-1115
718-392-1660
Fax: 718-729-5106
Email: wew@williamsvalve.com

800 lb Bellows Seal Globe Valves

Bolted Bonnet

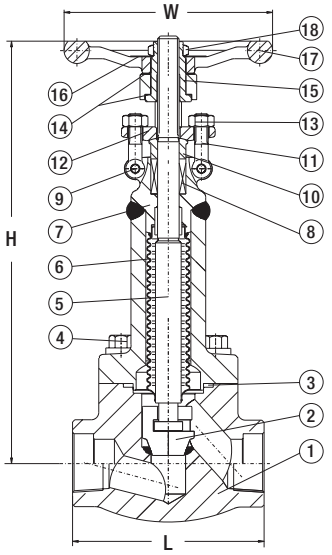

F802T-BS (Threaded)
F802SW-BS (Socket Weld)

Welded Bonnet

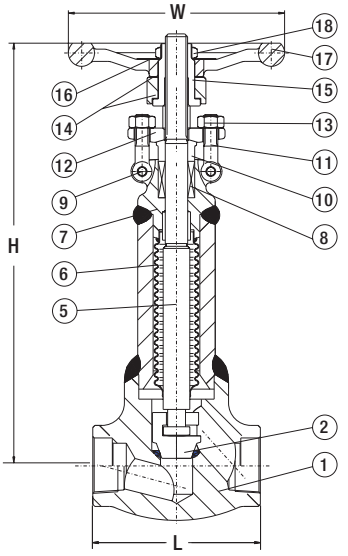

F802T-WB-BS (Threaded)
F802SW-WB-BS (Socket Weld)

Material Specifications NO.	Part Name	ASTM Type A105	ASTM Type F22	ASTM Type F304(L)	ASTM Type F316(L)
1	Body	A105	A182 F22	A182 F304(L)	A182 F316(L)
2	Disc	A276 420	A276 304	A276 304(L)	A276 316(L)
3	Gasket	Corrugated SS+graphite	Corrugated SS+graphite	SS+PTFE	SS+PTFE
4	Bonnet Bolt	A193 B7	A193 B16	A193 B8	A193 B8M
5	Stem	A182 F6	A182 F304	A182 F304(L)	A182 F316(L)
6	Bellow Pipe	SS	SS	SS	SS
7	Bonnet	A105	A182 F22	A182 F304(L)	A182 F316(L)
8	Stem Packing	Flexible Graphite	Flexible Graphite	PTFE	PTFE
9	Pin	A276 420	A276 420	A182 F304	A182 F304
10	Gland	A276 420	A276 420	A182 F304	A182 F304
11	Gland Eyebolt	A193 B7	A193 B16	A193 B8	A193 B8M
12	Gland Flange	A216 WCB	A216 WCB	A351 CF8	A351 CF8
13	Gland Nut	A194 2H	A194 4	A194 8	A194 8M
14	Bearing Washer	SS	SS	SS	SS
15	Yoke Nut	A276 410	A276 410	A276 410	A276 410
16	Nameplate	SS	SS	SS	SS
17	Handwheel	A197	A197	A197	A197
18	H.W. Nut	A194 2H	A194 4	A194 8	A194 8M
	Suitable Medium	W.O.G. etc.	W.O.G. etc.	HNO_3, CH_3OOH etc	HNO_3, CH_3OOH etc
	Suitable Temperature	-29°C~425°C	-29°C~550°C	-29°C~180°C	-29°C~180°C

Note: Other materials are available upon request.

Dimensions (in) and Weights (lb)

NPS	Conv. Full	3/8	1/2 3/8	3/4 1/2	1 3/4	1-1/4 1	1-1/2 1-1/4	2 1-1/2
L		3.11	3.11	3.62	4.37	4.72	5.98	6.77
H (OPEN)		8.66	8.66	8.86	9.61	12.64	12.64	13.66
W		3.94	3.94	3.94	4.92	6.30	6.30	7.09
Weights	Bolted	7.06	6.62	10.58	17.42	24.26	37.04	55.57
	Welded	6.62	6.17	10.58	15.44	21.17	29.77	44.54

Forged Steel Flanged End Valves

Williams valves are available in three bonnet designs:

1. Bolted Bonnet, with male-female joint, spiral wound gasket, made in F304L/graphite. Ring joint gasket is also available on request.
2. Welded Bonnet, with a threaded and seal welded joint. On request a full penetration welded joint is available.
3. Pressure Seal Bonnet, with a threaded and pressure seal bonnet joint.

Flanged end valves are available in gate, globe, piston check and swing check design configurations. Integral Flanges available on request.

Flanged End Valve Design Construction and Specifications

Williams flanged valves conform to API 602, MSS-SP-118 and ANSI B 16.34.
They are tested according to API 598, and marked as per MSS SP-25

Construction is as follows:

- Full Port or Standard Port
- Face to Face according to ANSI B16.10
- Flanges according to ANSI B16.5
- Pressure seal bonnet
- Outside Screw and Yoke (OS&Y)
- Two piece self aligning packing gland
- Integral backseat
- Butt welded ends to ASME B16.25
- RTJ body bonnet gasket ring type joint
- Bolted Bonnet with spiral-wound gasket, threaded and seal welded bonnet or threaded and pressure seal bonnet.

WILLIAM E. WILLIAMS VALVE CORPORATION
Phone: 1-800-221-1115
718-392-1660
Fax: 718-729-5106
Email: wew@williamsvalve.com

150-600 lb Flanged End Gate Valves

Conventional Port
F 15 F (150 lb)
F 30 F (300 lb)
F 60 F (600 lb)

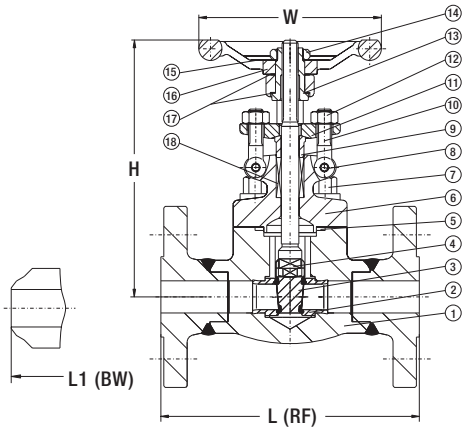

Full Port
F 17 F (150 lb)
F 37 F (300 lb)
F 67 F (600 lb)

Integral Flanges Available

Material Specifications NO.	Part Name	ASTM Type A105	ASTM Type F22	ASTM Type F304(L)	ASTM Type F316(L)
1	Body	A105	A182 F22	A182 F304(L)	A182 F316(L)
2	Seat Ring	A276 420	A276 304	A276 304(L)	A276 316(L)
3	Wedge	A276 430 & 410	A182 F304	A182 F304(L)	A182 F316(L)
4	Stem	A182 F6	A182 F304	A182 F304(L)	A182 F316(L)
5	Gasket	Corrugated SS + Graphite	Corrugated SS + Graphite	SS+PTFE	SS+PTFE
6	Bonnet	A105	A182 F22	A182 F304(L)	A182 F316(L)
7	Bonnet Bolt	A193 B7	A193 B16	A193 B8	A193 B8M
8	Pin	A276 420	A276 420	A182 F304	A182 F304
9	Gland	A276 410	A276 410	A182 F304(L)	A182 F316(L)
10	Gland Eyebolt	A193 B7	A193 B16	A193 B8	A193 B8M
11	Gland Flange	A105	A182 F11	A182 F304(L)	A182 F316(L)
12	Gland Nut	A194 2H	A1944	A1948	A1948M
13	Yoke Nut	A276 410	A276 410	A276 410	A276 410
14	H.W. Lock Nut	A194 2H	A1944	A1948	A1948M
15	Nameplate	SS	SS	SS	SS
16	Handwheel	A197	A197	A197	A197
17	Bearing Gasket	A473 431	A473 431	A473 431	A473 431
18	Stem Packing	Flexible Graphite	Flexible Graphite	PTFE	PTFE
	Suitable Medium	W.O.G. etc.	W.O.G. etc.	HNO_3, CH_3OOH etc	HNO_3, CH_3OOH etc
	Suitable Temperature	-29°C~425°C	-29°C~550°C	-29°C~180°C	-29°C~180°C

Note: Other materials are available upon request.

Dimensions (in) and Weights (lb)

NPS			1/2	3/4	1	1-1/4	1-1/2	2
L(RF) L1(BW)	150		4.25	4.61	5.00	5.51	6.50	7.99
	300		5.51	5.98	6.50	7.01	7.48	8.50
	600		6.50	7.48	8.50	9.02	9.49	11.50
H(OPEN)	150, 300		6.22	6.65	7.76	9.29	9.69	11.14
	600		6.65	7.76	9.29	9.69	11.14	12.60
W			3.94	3.94	4.92	6.30	6.30	7.09
Weights	150	RF	9.92	11.47	18.08	25.36	27.56	44.76
		BW	6.17	7.28	11.91	15.66	18.08	27.56
	300	RF	10.58	13.67	20.51	30.87	34.18	51.60
		BW	7.72	9.70	14.99	17.86	20.29	33.96
	600	RF	13.01	16.32	22.93	35.72	38.59	62.40
		BW	9.92	11.25	18.08	23.15	27.34	44.32

WILLIAM E. WILLIAMS VALVE CORPORATION
Phone: 1-800-221-1115
718-392-1660
Fax: 718-729-5106
Email: wew@williamsvalve.com

Flanged End Gate Valve 1500 lb

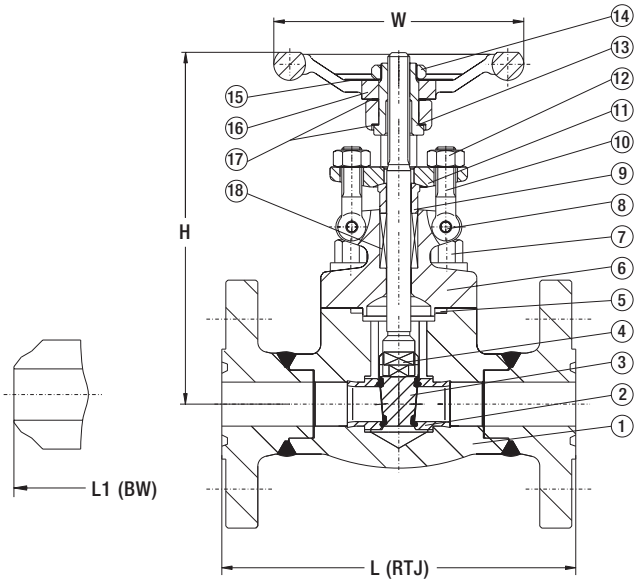

Conventional Port
F 150 F

Full Port
F 157 F

Integral Flanges Available

Material Specifications NO.	Part Name	ASTM Type A105	ASTM Type F22	ASTM Type F304(L)	ASTM Type F316(L)
1	Body	A105	A182 F22	A182 F304(L)	A182 F316(L)
2	Seat Ring	A276 420	A276 304	A276 304(L)	A276 316(L)
3	Wedge	A276 430 & 410	A182 F304	A182 F304(L)	A182 F316(L)
4	Stem	A182 F6	A182 F304	A182 F304(L)	A182 F316(L)
5	Gasket	Corrugated SS + Graphite	Corrugated SS + Graphite	SS+PTFE	SS+PTFE
6	Bonnet	A105	A182 F22	A182 F304(L)	A182 F316(L)
7	Bonnet Bolt	A193 B7	A193 B16	A193 B8	A193 B8M
8	Pin	A276 420	A276 420	A182 F304	A182 F304
9	Gland	A276 410	A276 410	A182 F304(L)	A182 F316(L)
10	Gland Eyebolt	A193 B7	A193 B16	A193 B8	A193 B8M
11	Gland Flange	A105	A182 F11	A182 F304(L)	A182 F316(L)
12	Gland Nut	A194 2H	A1944	A1948	A1948M
13	Yoke Nut	A276 420	A276 420	A276 420	A276 420
14	H.W. Lock Nut	A194 2H	A1944	A1948	A1948M
15	Nameplate	SS	SS	SS	SS
16	Handwheel	A197	A197	A197	A197
17	Bearing Gasket	A473 431	A473 431	A473 431	A473 431
18	Stem Packing	Flexible Graphite	Flexible Graphite	PTFE	PTFE
	Suitable Medium	W.O.G. etc.	W.O.G. etc.	HNO_3, CH_3OOH etc	HNO_3, CH_3OOH etc
	Suitable Temperature	-29°C~425°C	-29°C~550°C	-29°C~180°C	-29°C~180°C

Note: Other materials are available upon request.

Dimensions (in) and Weights (lb)

NPS		1/2	3/4	1	1-1/4	1-1/2	2
L(RTJ)	1500	8.50	9.02	10.00	10.98	12.01	14.61
L1(BW)	1500	8.50	9.02	10.00	10.98	12.01	14.49
H (OPEN)		7.76	7.76	9.29	9.69	11.14	12.99
W		4.92	4.92	6.30	6.30	7.09	7.87
Weights	RTJ	15.88	25.36	34.40	35.72	49.83	72.32
	BW	11.47	20.51	27.34	30.43	41.67	60.64

WILLIAM E. WILLIAMS VALVE CORPORATION
Phone: 1-800-221-1115
718-392-1660
Fax: 718-729-5106
Email: wew@williamsvalve.com

Flanged End Globe Valves

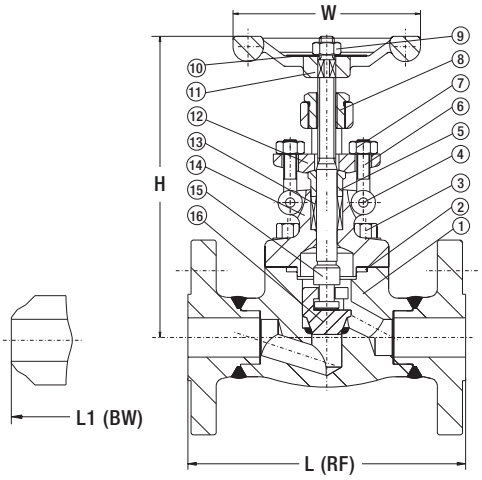

F 152 F (150 lb)
F 302 F (300 lb)
F 602 F (600 lb)

Integral Flanges Available

Material Specifications NO.	Part Name	ASTM Type A105	ASTM Type F22	ASTM Type F304(L)	ASTM Type F316(L)
1	Body	A105	A182 F22	A182 F304(L)	A182 F316(L)
2	Gasket	Corrugated SS+graphite	Corrugated SS+graphite	SS+PTFE	SS+PTFE
3	Bonnet Bolt	A193 B7	A193 B16	A193 B8	A193 B8M
4	Pin	A276 420	A276 420	A276 304	A276 304
5	Gland	A276 410	A276 410	A182 F304(L)	A182 F316(L)
6	Gland Eyebolt	A193 B7	A193 B16	A193 B8	A193 B8M
7	Gland Nut	A194 2H	A194 4	A194 8	A194 8M
8	Yoke Nut	A276 410	A276 410	A276 410	A276 410
9	H.W. Nut	A194 2H	A194 4	A194 8	A194 8M
10	Nameplate	SS	SS	SS	SS
11	Handwheel	A197	A197	A197	A197
12	Gland Flange	A216 WCB	A216 WCB	A351 CF8	A351 CF8
13	Stem Packing	Flexible Graphite	Flexible Graphite	PTFE	PTFE
14	Bonnet	A105	A276 304	A182 F304(L)	A182 F316(L)
15	Stem	A182 F6	A182 F304	A182 F304(L)	A182 F316(L)
16	Disc	A276 420	A276 304	A276 304()	A276 316(L)
	Suitable Medium	W.O.G. etc.	W.O.G. etc.	HNO_3, CH_3OOH etc	HNO_3, CH_3OOH etc
	Suitable Temperature	-29°C~425°C	-29°C~550°C	-29°C~180°C	-29°C~180°C

Note: Other materials are available upon request.

Dimensions (in) and Weights (lb)

NPS			1/2	3/4	1	1-1/4	1-1/2	2
L(RF) L1(BW)	150		4.25	4.61	5.00	5.51	6.50	7.99
	300		5.98	7.01	7.99	8.50	9.02	10.51
	600		6.50	7.48	8.50	9.02	9.49	11.50
H(OPEN)	150, 300		6.54	6.73	8.15	9.45	10.16	12.99
	600		6.73	8.15	9.45	10.16	12.99	14.96
W			3.94	3.94	4.92	6.30	6.30	7.09
Weights	150	RF	9.92	15.21	21.61	29.77	43.00	61.74
		BW	5.07	7.94	17.20	18.08	26.46	33.08
	300	RF	10.58	16.98	24.26	37.04	46.75	71.88
		BW	6.17	8.82	18.74	20.29	27.78	37.04
	600	RF	12.35	17.20	27.56	37.49	51.82	85.55
		BW	7.50	10.36	20.29	23.15	29.33	41.67

WILLIAM E. WILLIAMS VALVE CORPORATION
Phone: 1-800-221-1115
718-392-1660
Fax: 718-729-5106
Email: wew@williamsvalve.com

Flanged End Globe Valve 1500 lb

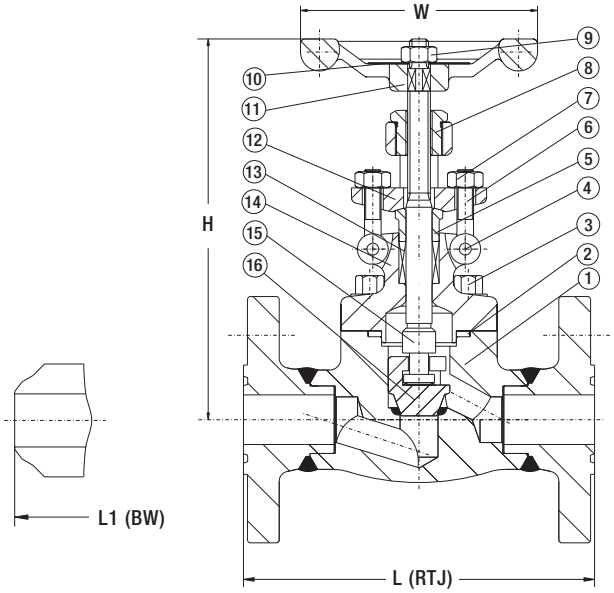

F 1502 F

Integral Flanges Available

Material Specifications NO.	Part Name	ASTM Type A105	ASTM Type F22	ASTM Type F304(L)	ASTM Type F316(L)
1	Body	A105	A182 F22	A182 F304(L)	A182 F316(L)
2	Gasket	Corrugated SS+graphite	Corrugated SS+graphite	SS+PTFE	SS+PTFE
3	Bonnet Bolt	A193 B7	A193 B16	A193 B8	A193 B8M
4	Pin	A276 420	A276 420	A276 304	A276 304
5	Gland	A276 410	A276 410	A182 F304(L)	A182 F316(L)
6	Gland Eyebolt	A193 B7	A193 B16	A193 B8	A193 B8M
7	Gland Nut	A194 2H	A194 4	A194 8	A194 8M
8	Yoke Nut	A276 410	A276 410	A276 410	A276 410
9	H.W. Nut	A194 2H	A194 4	A194 8	A194 8M
10	Nameplate	SS	SS	SS	SS
11	Handwheel	A197	A197	A197	A197
12	Gland Flange	A216 WCB	A216 WCB	A351 CF8	A351 CF8
13	Stem Packing	Flexible Graphite	Flexible Graphite	PTFE	PTFE
14	Bonnet Bolt	A105	A276 304	A182 F304(L)	A182 F316(L)
15	Stem	A182 F6	A182 F304	A182 F304(L)	A182 F316(L)
16	Disc				
	Suitable Medium	W.O.G. etc.	W.O.G. etc.	HNO_3, CH_3OOH etc	HNO_3, CH_3OOH etc
	Suitable Temperature	-29°C~425°C	-29°C~550°C	-29°C~180°C	-29°C~180°C

Note: Other materials are available upon request.

Dimensions (in) and Weights (lb)

NPS		1/2	3/4	1	1-1/4	1-1/2	2
L(RTJ)	1500	8.50	9.02	10.00	10.98	12.01	14.61
L1(BW)	1500	8.50	9.02	10.00	10.98	12.01	14.49
H (OPEN)		8.15	8.15	9.45	10.16	12.99	13.98
W		4.92	4.92	6.30	6.30	7.09	7.87
	RTJ	17.64	29.11	38.37	41.90	54.02	68.36
Weights	BW	11.47	22.05	32.19	34.84	45.20	61.30

Flanged End Check Valves

Piston Check

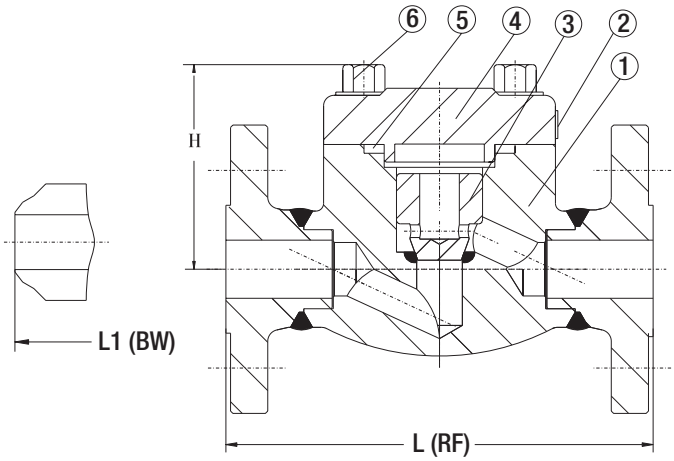

F 151 L F (150 lb)
F 301 L F (300 lb)
F 601 L F (600 lb)

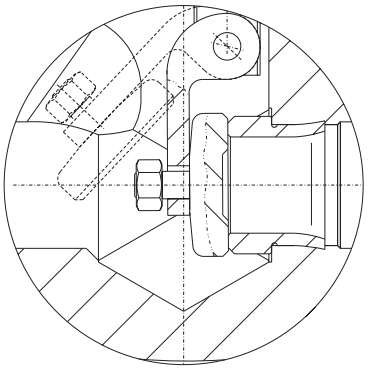

Swing Check

F 151 F (150 lb)
F 301 F (300 lb)
F 601 F (600 lb)

Integral Flanges Available

Material Specifications NO.	Part Name	ASTM Type A105	ASTM Type F22	ASTM Type F304(L)	ASTM Type F316(L)
1	Body	A105	A182 F22	A182 F304(L)	A182 F316(L)
2	Nameplate	SS	SS	SS	SS
3	Piston Disc	A276 420	A276 304	A276 304(L)	A276 316(L)
4	Bonnet	A105	A182 F22	A182 F304(L)	A182 F316(L)
5	Gasket	Corrugated SS + Graphite	Corrugated SS + Graphite	SS+PTFE	SS+PTFE
6	Bolt	A193 B7	A193 B16	A193 B8	A193 B8(M)

Note: Other materials are available upon request.

Dimensions (in) and Weights (lb)

NPS			1/2	3/4	1	1-1/4	1-1/2	2
L(RF) L1(BW)	150		4.25	4.61	5.00	5.51	6.50	7.99
	300		5.98	7.01	7.99	8.50	9.02	10.51
	600		6.50	7.48	8.50	9.02	9.49	11.50
H(OPEN)	150, 300		2.40	2.40	3.11	3.74	4.06	4.65
	600		2.40	3.11	3.74	4.06	4.65	5.31
Weights	150	RF	0.10	0.13	0.17	0.32	0.35	0.50
		BW	0.07	0.07	0.08	0.20	0.22	0.31
	300	RF	6.02	8.05	10.45	19.34	21.17	30.21
		BW	4.19	4.63	6.62	11.29	14.55	17.31
	600	RF	6.62	8.82	12.86	20.88	22.27	34.40
		BW	4.41	6.88	9.37	15.99	18.87	29.99

WILLIAM E. WILLIAMS VALVE CORPORATION
Phone: 1-800-221-1115
718-392-1660
Fax: 718-729-5106
Email: wew@williamsvalve.com

Flanged End Check Valve 1500 lb

Piston Check

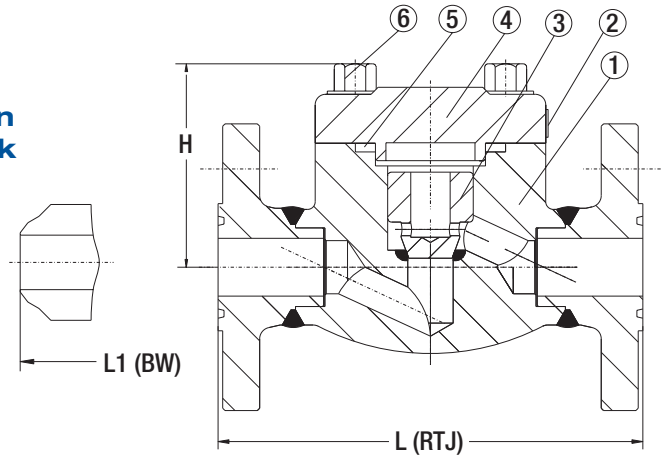

F 1501 L F

Swing Check

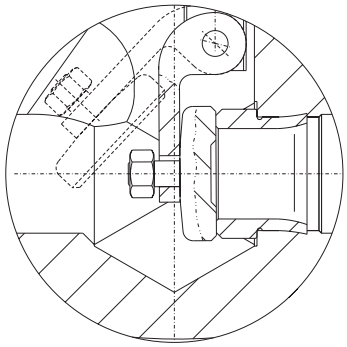

F 1501 F

Integral Flanges Available

Material Specifications NO.	Part Name	ASTM Type A105	ASTM Type F22	ASTM Type F304(L)	ASTM Type F316(L)
1	Body	A105	A182 F22	A182 F304(L)	A182 F316(L)
2	Nameplate	SS	SS	SS	SS
3	Piston Disc	A276 420	A276 304	A276 304(L)	A276 316(L)
4	Bonnet	A105	A182 F22	A182 F304(L)	A182 F316(L)
5	Gasket	Corrugated SS + Graphite	Corrugated SS + Graphite	Corrugated SS + Graphite	Corrugated SS + Graphite
6	Bolt	A193 B7	A193 B16	A193 B8(M)	A193 B8(M)

Note: Other materials are available upon request.

Dimensions (in) and Weights (lb)

NPS		1/2	3/4	1	1-1/4	1-1/2	2
L(RTJ)		8.50	9.02	10.00	10.98	12.01	14.61
L1(BW)		8.50	9.02	10.00	10.98	12.01	14.49
H		3.11	3.11	3.74	4.09	4.72	5.47
Weights	RTJ	18.74	23.15	34.62	45.86	59.98	72.77
	BW	14.11	17.64	29.11	39.25	53.36	65.49

WILLIAM E. WILLIAMS VALVE CORPORATION
Phone: 1-800-221-1115
718-392-1660
Fax: 718-729-5106
Email: wew@williamsvalve.com

800 lb Y-Pattern Globe Valve

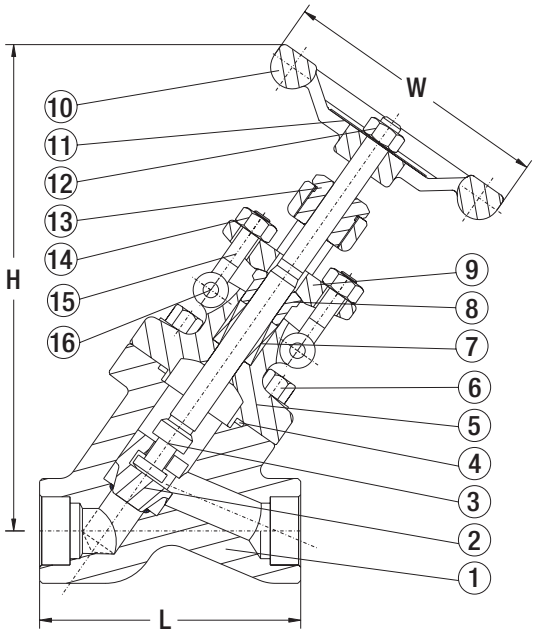

F802Y

Material Specifications NO.	Part Name	ASTM Type A105	ASTM Type A182 F22	ASTM Type A182 F304(L)	ASTM A182 F316(L)
1	Body	A105	A182 F22	A182 F304(L)	A182 F316(L)
2	Disc	A276 420	A276 304	A276 304(L)	A276 316(L)
3	Stem	A182 F6	A182 F304	A182 F304(L)	A182 F316(L)
4	Gasket	Corrugated SS + Graphite	Corrugated SS + Graphite	SS+PTFE	SS+PTFE
5	Bonnet	A105	A276 304	A276 304(L)	A276 316(L)
6	Bonnet Bolt	A193 B7	A193 B16	A193 B8	A193 B8M
7	Stem Packing	Flexible Graphite	Flexible Graphite	PTFE	PTFE
8	Gland	A276 410	A276 410	A182 F304(L)	A182 F316(L)
9	Gland Flange	A216 WCB	A216 WCB	A351 CF8	A351 CF8
10	Handwheel	A197	A197	A197	A197
11	Nameplate	SS	SS	SS	SS
12	H.W. Nut	A194 2H	A194 4	A194 8	A194 8M
13	Yoke Nut	A276 410	A276 410	A276 410	A276 410
14	Gland Nut	A194 2H	A194 4	A194 8	A194 8M
15	Gland Eyebolt	A193 B7	A193 B16	A193 B8	A193 B8M
16	Pin	A276 420	A276 420	A276 304	A276 304
	Suitable Medium	W.O.G. etc.	W.O.G. etc.	HNO_3, CH_3OOH etc	HNO_3, CH_3OOH etc
	Suitable Temperature	-29°C~425°C	-29°C~550°C	-29°C~180°C	-29°C~180°C

Note: Other materials are available upon request.

Dimensions (in) and Weights (lb)

NPS	3/8	3/4	1	1-1/4	1-1/2	2
L	3.86	4.37	4.72	5.51	5.51	6.69
H OPEN)	6.89	8.46	10.00	12.01	12.01	14.37
W	3.94	4.92	6.30	6.30	7.09	7.87
Weights	11.03	13.89	16.76	21.61	30.43	30.87

Phone: 1-800-221-1115
718-392-1660
Fax: 718-729-5106
Email: wew@williamsvalve.com

Pressure Seal Y-Pattern Globe Valves

F1502Y-PS
F2502Y-PS

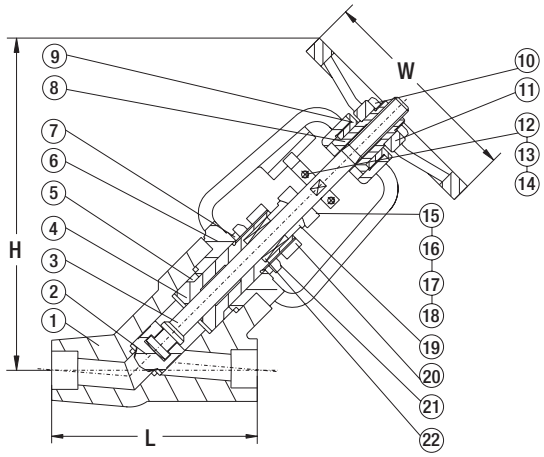

Material Specifications NO.	Part Name	ASTM Type A105	ASTM Type A182 F22	ASTM Type A192 304(L)	ASTM A182 F182 F316(L)
1	Body	A105	A182 F22	A182 F304(L)	A182 F316(L)
2	Disc	A276 420	A276 304	A276 304(L)	A276 316(L)
3	Stem	A182 F6	A182 F6	A182 F304(L)	A182 F316(L)
4	Pressure Seat	A105	A182 F304	A182 F304(L)	A182 F316(L)
5	Pressure Ring	A182 F304(L)	A182 F304(L)	A182 F304(L)	A182 F316(L)
6	Bonnet	A105	A182 F22	A182 F304(L)	A182 F316(L)
7	P.S. Washer	A105	A182 F22	A182 F304(L)	A182 F316(L)
8	Yoke Nut	A276 410	A276 410	A276 410	A276 410
9	Retaining Nut	A194 2H	A194 4	A194 8	A194 8M
10	H.W. Lock Nut	A194 2H	A194 4	A194 8	A194 8M
11	Handwheel	A197	A197	A197	A197
12	Wafer Board	A105	A182 F22	A182 F304(L)	A182 F316(L)
13	Bolt	A193 B7	A193 B16	A193 B8	A1983 B8M
14	Nut	A194 2H	A194 4	A194 8	A194 8M
15	Gland Flange	A216 WCB	A216 WCB	A351 CF8	A351 CF8
16	Gland Eyebolt	A193 B7	A193 B16	A193 B8	A1983 B8M
17	Gland Nut	A194 2H	A194 4	A194 8	A194 8M
18	Pin	A276 420	A276 420	A182 F304	A182 F304
19	Gland	A276 420		A182 F304	
20	Bearing Ear	A105	A182 F22	A182 F304(L)	A182 F316(L)
21	P.S. Lock Nut	A194 2H	A194 4	A194 8	A194 8M
22	Stem Packing	Flexible Graphite	Flexible Graphite	PTFE	PTFE
	Suitable Medium	W.O.G. etc.	W.O.G. etc.	HNO_3, CH_3OOH etc	HNO_3, CH_3OOH etc
	Suitable Temperature	-29°C~425°C	-29°C~550°C	-29°C~180°C	-29°C~180°C

Note: Other materials are available upon request.

Dimensions (in) and Weights (lb)

NPS		1/2	3/4	1	1-1/4	1-1/2	2
L	900-1500#	5.51	5.51	5.51	7.01	7.01	8.50
	2500#	7.32	7.32	7.32	9.13	9.13	10.98
H (OPEN)		13.11	13.11	13.11	15.98	15.98	20.63
W		4.92	4.92	6.30	6.30	7.09	7.87
Weights	900-1500#	24.70	23.15	22.27	46.31	43.22	89.08
	2500#	27.12	25.58	23.81	61.74	58.21	96.58

William E. Williams
Valve Corporation
38-52 Review Avenue
Long Island City, NY 11101
Tel: (718) 392-1660
(800) 221-1115
Fax: (718) 729-5106
www.williamsvalve.com