WILLIAM E.
WILLIAMS
VALVE CORPORATION

Ball Valves

WILLIAM E. WILLIAMS VALVE CORPORATION

Phone: 1-800-221-1115
718-392-1660

Fax: 718-729-5106
Email: wew@williamsvalve.com

How to Order Ball Valves

	A	B	C	D	E	F	G	H	I
	Size Inches	Design	Pressure Class	Port	End Connection	Body Material	Ball/Stem Material	Seat Material	Accessory
Example:	10"	FP	15	7	R	2	2	V	GO
	10" 1500# RTJ Full Port, 3 piece Trunnion, LF2 Body and Trim, Viton Seat, Gear Operated								
	2"	W	1	6	F		1	RT	
	2" 150# RF, Reduced Port, 2 piece Floater, WCB Body and Trim, RT Seat, Lever Operated								

B

Design	Cast	Forged
1 pc/2 pc FLOATER	W	FW
3 pc FLOATER	D	FD
2 pc TRUNNION	T	FT
3 pc TRUNNION	P	FP
FULLY WELDED	X	FX
TOP ENTRY	E	FE

C

Pressure Class	
ANSI	
150	1
300	3
600	6
900	9
1000	10
1500	15
WOG	
2000	20
2500	25
5000	50
10000	100

D

Port	
Reduced (1 pc)	6
Full (2 pc)	7

E

Ends	
Raised Face	F
Butt Weld	W
Ring Joint	R
Socket Weld	S
Threaded End	T
Pup Ends	P

F

Body Material						
Casting	Forging			Casting	Forging	
A216 WCB	A105	DEFAULT		A217 WC9	A182 F22	9
A352 LCB	A350 LF2	2		A351 CF3M	A182 316L	10
A352 LC3	A350 LF3	3		A217 WC6	A182 F11	11
A351 CF8	A182 304	4		A351 CF8C	A182 347	12
A217 C5	A182 F5	5		A890 1A	A182 F50	13
A351 CF8M	A182 316	6		A890 4A	A182 F51	14
A351 CF3	A182 304L	7		ASTM B62 Bronze		15
A217 C12	A182 F9	8		OTHER		0

G

Ball/Stem Material	
A105+ENP/410	1
LF2+ENP/LF2	2
A105+ENP/F6a	3
F6+ENP/F6a	4
CF8/F304	5
CF8M/316	6
F51	7
316L/F316L	8
F304L	9
OTHER	10

H

Seat Material	
Reinforced Teflon	RT
Virgin Teflon	T
Viton	V
Devlon	D
Nylon	N
Peek	P
Metal Seated	M

I

Accessory	
Lever	DEFAULT
Gear Op.	GO
Motor Op.	MO
Hydraulic Op.	HO
Bare Stem	BS
Oxy Cleaned	O2
Extended Body	EB

WILLIAM E. WILLIAMS VALVE CORPORATION
Phone: 1-800-221-1115
718-392-1660
Fax: 718-729-5106
Email: wew@williamsvalve.com

TECHNICAL FEATURES

STANDARD	TYPE W	TYPE T	COMMENTS
Size	**1/2"FB~10"**	**2"FB~6"RB**	**Special sizes available on request**
Pressure	ANSI 150~600	ANSI 150~1500	Additional
Two piece split body design	YES	YES	
Stem anti-static device anti-blown out design	YES	YES	
Self relieving seats	NO	YES	
Double piston effect seats	NO	NO	Optional for type T
Double block and bleed	NO	YES	Optional for type T
Metal to metal seats	NO	YES(*)	
Trunnion mounted ball	NO	YES	
Lubricated stem	NO	YES	
Lubricated seat	NO	NO	Optional for type T
Full or Reduced bore	YES	YES	
Bi-directional	NO	YES	
Minimum thickness ASME B16.34	YES	YES	
RF or RTJ flanges to ASME B16.5	YES	YES	Other flange design optional
BW (butt-weld)ends to ASME B16.25	NO	YES	
Bore and end to end dimensions to API 6D	YES	YES	
Manufacture in accordande with API spec.6D/ASME B16.34	YES	YES	
Materials certification to EN10204 type 3.1.B for pressure containing parts,ball ,stem and seats	YES	YES	Type 3.1.c materials certification level optional
Fire safe design to API 6FA(BS6755 Pt.2)	YES	YES	API 607 optional
Test and Inspection to API 598/API 6D	YES	YES	
N.D.T verification on body casting (dye examination)	YES	YES	Other N.D.T verification Ultrasonic examination or X-Ray optional
Operation by gear w/handwheel or actuator	YES	YES	

* Optional

Type T

Type T

WILLIAM E. WILLIAMS VALVE CORPORATION
Phone: 1-800-221-1115
718-392-1660
Fax: 718-729-5106
Email: wew@williamsvalve.com

TECHNICAL FEATURES

STANDARD	TYPE T	TYPE P	TYPE D	COMMENTS
Size	**6"FB up to16"RB**	**16"FB up to 36"**	**1/2" to 10"**	**Special sizes available on request**
Pressure	ANSI 150~1500	ANSI 150~1500	ANSI 150~1500	
Two piece split body design	YES	NO	NO	
Three piece split body design	NO	YES	YES	
Stem anti-static device anti-blown out design	YES	YES	YES	
Self relieving seats	NO	NO	NO	Optional for Types T and P
Double piston Effect seats	YES(*)	YES(*)	NO	
Double block and bleed	YES	YES	NO	Open/closed position
Metal to metal seats	YES(*)	YES(*)	NO	
Trunnion mounted ball	YES	YES	NO	
Lubricated stem	YES	YES	NO	
Lubricated seat	YES	YES	NO	
Full or Reduced bore	YES	YES	YES	
Bi-directional	YES	YES	NO	
Minimum thickness ASME B16.34	YES	YES	YES	
RF or RTJ flanges to ASME B16.5	YES	YES	YES	Other flange design optional
BW (butt-weld)ends to ASME B16.25	YES	YES	NO	
Bore and end to end dimensions to API 6D	YES	YES	YES	
Manufacture in accordande with API spec.6D/ASME B16.34	YES	YES	YES	
Materials certification to EN10204 type 3.1.B for pressure containing parts,ball ,stem and seats	YES	YES	YES	Type 3.1.c materials certification level optional
Fire safe design to API 6FA(BS6755 Pt.2)	YES	YES	YES	Other fire safe codes (e.g.API 607) optional
Test and Inspection to API 598/API 6D	YES	YES	YES	
N.D.T verification on body casting (dye examination)	YES	YES	YES	Other N.D.T verification Ultrasonic examination or X-Ray optional
Operation by gear w/handwheel or actuator	YES	YES		

* Optional

Type W

Type P

WILLIAM E. WILLIAMS VALVE CORPORATION
Phone: 1-800-221-1115
718-392-1660
Fax: 718-729-5106
Email: wew@williamsvalve.com

TECHNICAL FEATURES

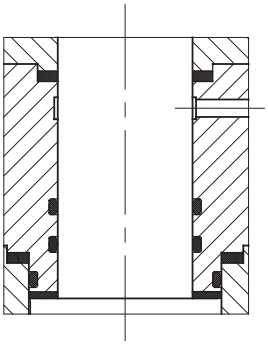

Emergency stem and seat sealant injection

In case of emergency,when sealing materials (seat sealing and stem o-ring) are damaged or decomposed by fire or other accidental causes,a sealant injection into fittings on both stem and seat prevents leakage until the primary seal is restored.For Type T ball valve the seat sealant injection is an optional feature. The material between ball and seat is a thermo-plastic, so no further injection is necessary.Self lubricated,low friction materials are used for stem bearings,stem seals and body seats.Low friction materials,e.g.nylon,are used for seat inserts.Stem bearings and self-lubricating seals give predictable operating torque for the life of the valve.

Stem

The stem is made separately from the ball.It is blow-out proof, with an integral collar at the bottom of the stem.

Stem Seal

Two static o-rings seal the stem,plus a third graphite seal retained by the adaptor flange. This ultimate seal can be replaced when the valve is in line and in closed position.

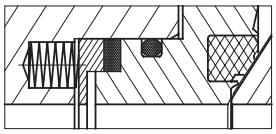

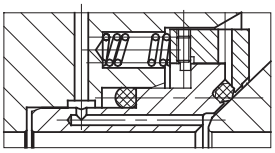

Seat design

Type T ball valve: plastic polymer insert for seat sealing,spring energised.
Type T/P ball valve:primary metal-to-metal seal and secondary synthetic o-ring seal,spring energised.

Body design

Williams trunnion mounted ball valves have a compact and streamlined body for maximum strength and minimum weight. Cast steel assures uniform fine grain and structure.

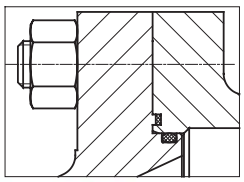

Double barrier on body joints

Williams valve design assures double barriers for all leakpaths.In this way,when one fails – the other seals.

Fire safe design and test

Fire safe is the standard design of Williams ball valves.
Two o-ring and gland gaskets prevent leakpaths from the valve stem area. The valve body – o-ring and gasket prevent leakage. If fire deteriorates o-ring, gland gasket,the stem fire safe packing prevents fluid or gas leakage.
Williams soft seat ball valve fire safe test(shown in the image)was witnessed and certified according to API6FA/API607.

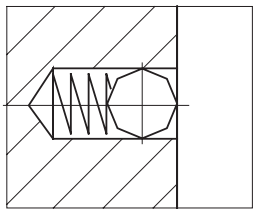

Anti-static device

This device is a standard feature of Williams ball valves. A coil spring thrusts a little sphere, providing continuity between stem and other metallic components of valve (ball and body)in order to avoid sparks during turning of the stem for opening and closing the valve and prevent problems in case of use with flammable fluids and gases.

Body vent and drain

The drain and vent plug of the valve body allows to check the integrity of the seat ring. A bleed valve may replace the drain plug

WILLIAM E. WILLIAMS VALVE CORPORATION
Phone: 1-800-221-1115
718-392-1660
Fax: 718-729-5106
Email: wew@williamsvalve.com

TECHNICAL FEATURES

Double block and bleed

Williams design of a valve with two seating surfaces between which the cavity can be vented through a bleed connection and thus confirm the tightness of the valve,as well in closed position as open position,when pressure is applied to any side or both sides of the valve.

The reliable seat sealing

Floating ball valves use the flexible sealing ring construction. When the medium pressure is low, the contact surface between the sealing ring and ball is small. When the medium pressure is higher with the flexible distortion of the sealing ring, the contact surface becomes larger between the sealing ring and ball, so the sealingring can endure larger medium thrust and avoid damage.

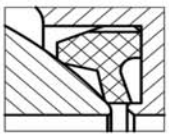

When the medium pressure is low

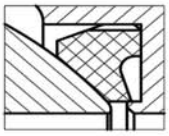

When the medium pressure is high

Automatic release

When the medium in the cavity sustains physical or chemical changes with the increase of temperature and results in the abnormal increase of cavity pressure, the construction design can push the seat to release the pressure to ensure the safety of the valve.

Double piston effect

With the DPE seat configuration when there is a leakage in the upstream seat,the pressure entering into the body cavity pushes the downstream seat against the ball and the valve seals.
This effect is a sealing principle involved in utilising line pressure to effect a seal across the floating seat.

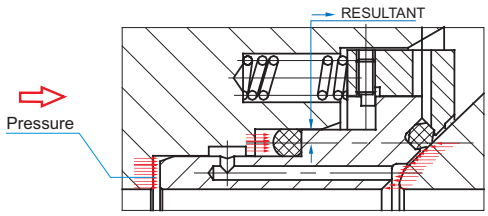

First barrier

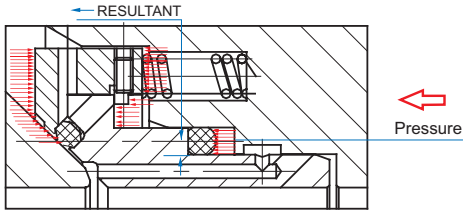

Second barrier

A relief valve is recommended to be installed to protect the body cavity from excess pressure.

Self relieving seat

In self relieving condition,excessive internal body pressure is automatically relieved both in upstream and downstream line by forcing the seats away from the closure element.

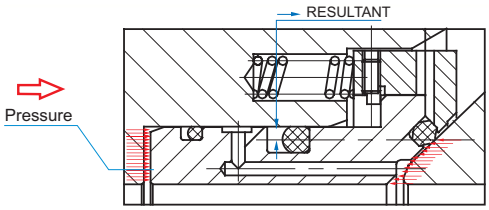

First barrier

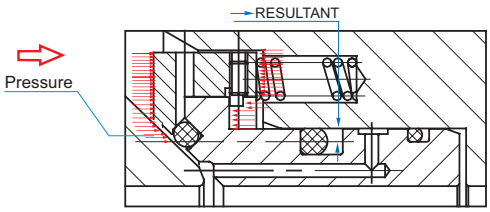

Second barrier

WILLIAM E. WILLIAMS VALVE CORPORATION
Phone: 1-800-221-1115
718-392-1660
Fax: 718-729-5106
Email: wew@williamsvalve.com

STD.MATERIAL SELECTION

Type W

20	LEVER	A216 WCB+1025
19	SMALL BALL	SS304,SS316
18	SMALL SPRING	SS304,SS316
17	CAPSCREW	A193 B7
16	BLOCK RING	65Mn
15	STOP SCREW	1035
14	STOP SCREW	1035
13	STEM	A276 410,F304,F304L,F316,F316L A105+ENP,17-4PH,4140+ENP
12	LIMITED PLATE	1025.STAINLESS STEEL
11	GLAND FLANGE	A216 WCB.A351 CF8
10	PACKING	GRAPHITE.PTFE
09	UPPER THRUST WASHER	PTFE
08	CLOSURE	A216-WCB.WCC,A352-LCB.LCC A351-CF8.CF8M.CF3.CF3M
07	BOLT	A193 B7.B7M.B8.B8M
06	NUT	A194 2H.2HM.8.8M
05	CLOSURE F.S SEAL	GRAPHITE
04	BODY O-RING	VITON.NBR
03	BALL	A105+ENP.A350 LF2+ENP.A182 F6a. F304.F304L. F316.F316L
02	SEAT	PTFE.RPTFE.PEEK.PPL NYLON.MOLON.DEVLON
01	BODY	A216-WCB.WCC,A352-LCB.LCC A351-CF8.CF8M.CF3.CF3M
Pos.	**Description**	**Material**

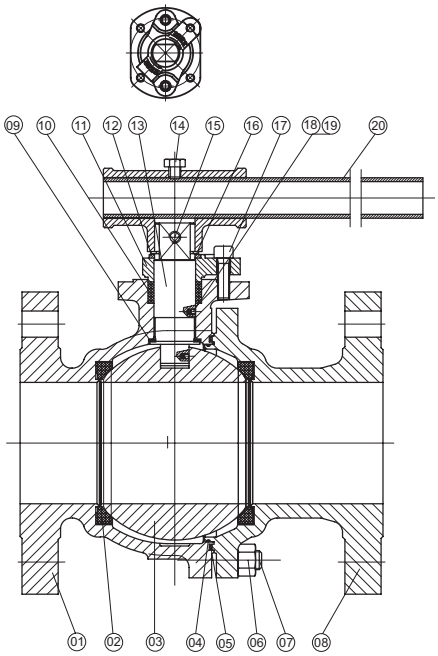

NOTE:WORKING TEMPERATURE:-29℃～120℃；-46℃～150℃

Type T

35	RELIER VALVE	1018 .SS304.SS304L.SS316.SS316L.
34	LIMITED PLATE	1025.STAINLESS STEEL
33	CAPSCREW	A193 B7.B7M.B8.B8M
32	SEAT SPRING	SS304.SS316.17-4PH.INCONEL X-750
31	WASHER	A105+ENP.A350 LF2+ENP.A182 F6a.F304 F304L.F316.F316L.4140+ENP.17-4PH
30	SEAT F.S SEAL	GRAPHITE
29	SEAT O-RING	VITON.NBR
28	SEAT RING	A105+ENP.A350 LF2+ENP.A182 F6a.F304 F304L.F316.F316L.4140+ENP.17-4PH
27	SEAT INSERT	PTFE.RPTFE.PEEK.PPL NYLON.MOLON.DEVLON
26	STEM GREASE FITTING	1018 .SS304.SS304L.SS316.SS316L.
25	ANTI-STATIC DEVICE	SS304.SS316
24	TOP COWER CAPSCREW	A193 B7.B7M.B8.B8M
23	ADAPTER PLATE CAPSCREW	A193 B7.B7M.B8.B8M
22	STEM F.S SEAL	GRAPHITE
21	STEM	A105+ENP.A350 LF2+ENP.A182 F6a.F304 F304L.F316.F316L.4140+ENP.17-4PH
20	TOP COWER F.S SEAL	GRAPHITE
19	PIN	65Mn
18	ADAPTER PLATE	1025.STAINLESS STEEL
17	TOP COVER	A105+ENP.A350 LF2+ENP.A182 F6a.F304 F304L.F316.F316L.4140+ENP.17-4PH
16	TOP COVER O-RING	VITON.NBR
15	UPPER THRUST WASHER	316+PTFE+MoS2
14	BEARING	316+PTFE+MoS2
13	BONNET	A216-WCB.WCC,A352-LCB.LCC A351-CF8.CF8M.CF3.CF3M
12	BOLT	A193 B7.B7M.B8.B8M
11	NUT	A194 2H.2HM.8.8M
10	CLOSURE F.S SEAL	GRAPHITE
09	BODY O-RING	VITON.NBR
08	LOWER TRUNNION CAPSCREW	A193 B7.B7M.B8.B8M
07	LOWER TRUNNION F.S SEAL	GRAPHITE
06	LOWER TRUNNION	A105+ENP.A350 LFS+ENP.A182 F6a.F304 F304L.F316.F316L.4141+ENP.17-4PH
05	LOWER TRUNNION O-RING	VITON .NBR
04	LOWER TRUNNION BEARING	316+PTFE+MoS2
03	DRAIN PLUG	1018 .SS304.SS304L.SS316.SS316L.
02	BALL	A105+ENP.A350 LF2+ENP.A182 F6a F304.F304L.F316.F316L
01	BODY	A216-WCB.WCC,A352-LCB.LCC A351-CF8.CF8M.CF3.CF3M
Pos.	**Description**	**Material**

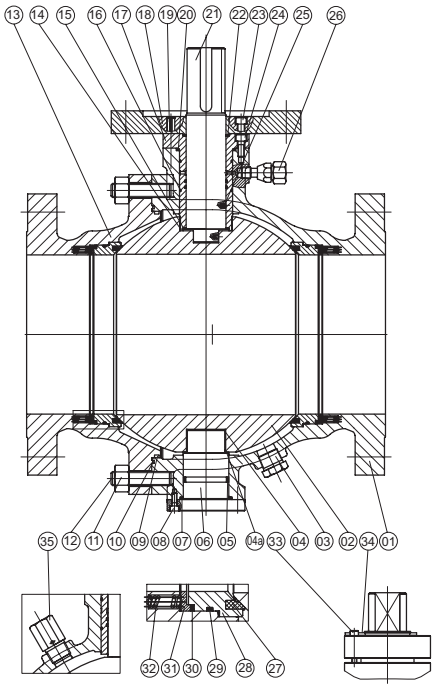

NOTES：1)ELECTROLESS NICKEL PLATED 0.001"THICKNESS
2)NYLON FOR CLASS 900～1500
3)FOR LEVER OPERATED VALVES
4)FOR GEAR OR ACTUATOROPERATED VALVES

SERVICE: STANDARD FLUID-CARBON STEEL VALVE-FIRE SAFE DESIGN
TEMPERATURE: -7℃～160℃(-7℃～121℃ FOR CLASS 900～1500)

WILLIAM E. WILLIAMS VALVE CORPORATION
Phone: 1-800-221-1115
718-392-1660
Fax: 718-729-5106
Email: wew@williamsvalve.com

STD.MATERIAL SELECTION

Type T

35	PIN	65Mn
34	LOWER THRUST WASHER	316+PTFE+MoS2
33	RELIER VALVE	1018 .STAINLESS STEEL.
32	SEAT SPRING	INCONEL X-750
31	WASHER	A105+ENP.A350 LF2+ENP.A182 F6a.F304. F304L.F316.F316L.4140+ENP.17-4PH
30	SEAT F.S SEAL	GRAPHITE
29	SEAT O-RING	VITON.NBR
28	SEAT RING	A105+ENP.A350 LF2+ENP.A182 F6a.F304. F304L.F316.F316L.4140+ENP.17-4PH
27	SEAT INSERT	PTFE.RPTFE.PEEK.PPL. NYLON.MOLON.DEVLON.VITON
26	SEAT GREASE FITTING	1018 .STAINLESS STEEL.
25	STEM GREASE FITTING	1018 .STAINLESS STEEL.
24	ANTI-STATIC DEVICE	SS304.SS316
23	TOP COVER CAPSCREW	A193 B7.B7M.B8.B8M
22	ADAPTER PLATE CAPSCREW	A193 B7.B7M.B8.B8M
21	STEM F.S SEAL	GRAPHITE
20	STEM	A105+ENP.A350 LF2+ENP.A182 F6a.F304. F304L.F316.F316L.4140+ENP.17-4PH
19	TOP COWER F.S SEAL	GRAPHITE
18	ADAPTER PLATE	1025.STAINLESS STEEL
17	TOP COVER	A105+ENP.A350 LF2+ENP.A182 F6a.F304. F304L.F316.F316L.4140+ENP.17-4PH
16	TOP COVER O-RING	VITON.NBR
15	UPPER THRUST WASHER	316+PTFE+MoS2
14	BEARING	316+PTFE+MoS2
13	BODY	A216-WCB.WCC,A352-LCB.LCC. A351-CF8.CF8M.CF3.CF3M
12	BOLT	A193 B7
11	NUT	A194 2H
10	CLOSURE F.S SEAL	GRAPHITE
09	BODY O-RING	VITON.NBR
08	LOWER TRUNNION CAPSCREW	A193 B7.B7M.B8.B8M
07	LOWER TRUNNION F.S SEAL	GRAPHITE
06	LOWER TRUNNION	A105+ENP.A350 LF2+ENP.A182 F6a.F304. F304L.F316.F316L.4141+ENP.17-4PH
05	LOWER TRUNNION O-RING	VITON .NBR
04	LOWER TRUNNION BEARING	316+PTFE+MoS2
03	DRAIN PLUG	1018.STAINLESS STEEL
02	BALL	A105+ENP.A350 LF2+ENP.A182 F6a. F304.F304L.F316.F316L
01	BODY	A216-WCB.WCC,A352-LCB.LCC. A351-CF8.CF8M.CF3.CF3M
Pos.	**Description**	**Material**

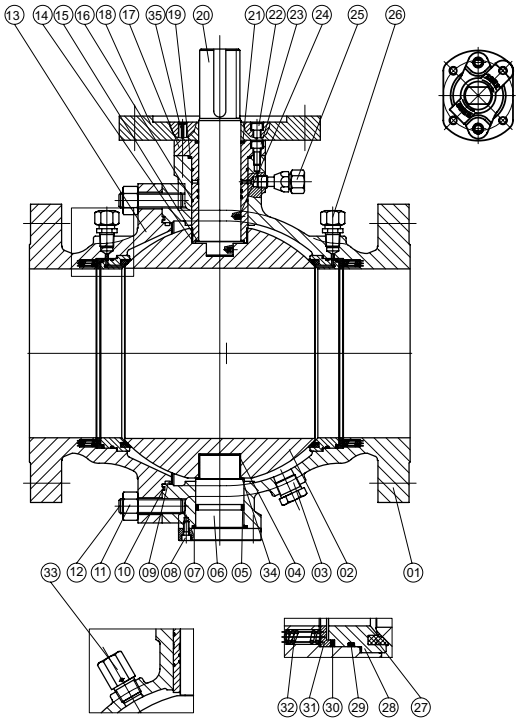

NOTES: 1)ELECTROLESS NICKEL PLATED 0.001"THICKNESS
2)NYLON FOR CLASS 900～1500
3)VITON AED FOR CLASS 600 AND ABOVE
SERVICE: STANDARD FLUID-CARBON STEEL VALVE-FIRE SAFE DESIGN
TEMPERATURE: -7℃～160℃(-7℃～121℃ FOR CLASS 900～1500)

Type P

37	DRAIN PLUG	1018.STAINLESS STEEL
36	RELIEF VALVE	1018.STAINLESS STEEL
35	SEAT GREASE FITTING	316+PTFE+MnO2
34	ANTI-STATIC DEVICE	SS304.SS316
33	STEM GREASE FITTING	1018.STAINLESS STEEL
32	UPPER THRUST WASHER	316+PTFE+MnO2
31	STEM O-RING	VITON
30	TOP COVER F.S.SEAL	GRAPHITE
29	PIN	65Mn
28	STEM F.S.SEAL	GRAPHITE
27	ADAPTER PLATE CAPSCREW	A193 B7
26	TOP COVER CAPSCREW	A193 B7
25	TOP COVER O-RING	VITON
24	TRUNNION BEARING	316+PTFE+MoS2
23	BEARING RETAINER PIN	A276 410.AISI4140.SS304.SS304L.SS316.SS316L
22	CLOSURE F.S. SEAL	GRAPHITE
21	BODY O-RING	VITON
20	LOWER THRUST WASHER	316+PTFE+MoS2
19	TRUNNION BEARING	316+PTFE+MoS2
18	SEAT O-RING	VITON.NBR
17	SEAT SPRING	INCONEL X 750
16	WASHER	A105+ENP.A350 LF2+ENP.STAINLESS STEEL
15	SEAT F.S SEAL	GRAPHITE
14	INSERT RING WASHER	A105+ENP.A350 LF2+ENP.STAINLESS STEEL
13	CAPSCREW	1025.STAINLESS STEEL
12	NUT	A194 2H
11	BOLT	A193 B7.
10	ADAPTER PLATE	1025.STAINLESS STEEL
09	TOP COVER	A105+ENP.A350 LF2+ENP.A182 F6a.F304. F304L.F316.F316L.4141+ENP.17-4PH
08	STEM	A105+ENP.A350 LF2+ENP.A182 F6a.F304. F304L.F316.F316L.4141+ENP.17-4PH
07	SEAT INSERT	PTFE.RPTFE.PEEK.PPL.NYLON.MOLON.DEVL-ON.VITON
06	SEAT RING	A105+ENP.A350 LF2+ENP.A182 F6a.F304. F304L.F316.F316L.4141+ENP.17-4PH
05	BALL	A105+ENP.A350 LF2+ENP.A182 F6a. F304.F304L.F316.F316L.4140+ENP.17-4PH
04	BODY	A216-WCB.WCC,A352-LCB.LCC. A351-CF8.CF8M.CF3.CF3M
03	BEARING RETAINER	A105+ENP.A350 LF2+ENP.A182 F6a. F304.F304L.F316.F316L
02	BALL	A105+ENP.A350 LF2+ENP.A182 F6a. F304.F304L.F316.F316L.4140+ENP.17-4PH
01	CLOSURE	A216-WCB.WCC,A352-LCB.LCC. A 351-CF8.CF8M.CF3.CF3M
Pos.	**Description**	**Material**

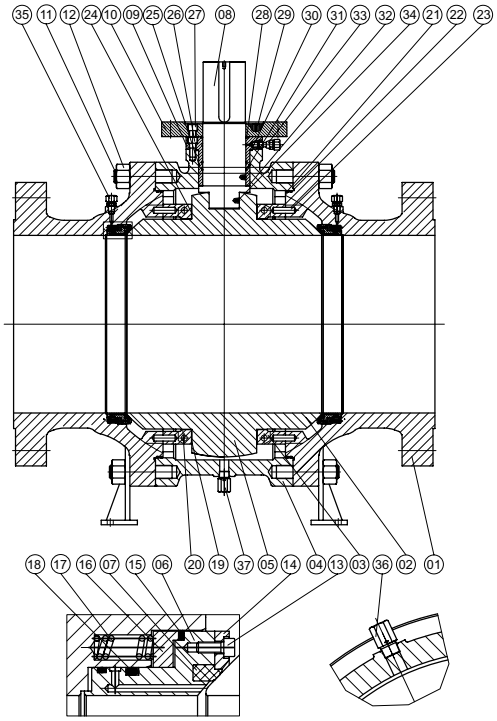

NOTES: 1)ELECTROLESS NICKEL PLATED 0.001"THICKNESS
2)NYLON FOR CLASS 900～1500
3)VITON AED FOR CLASS 600 AND ABOVE
SERVICE: STANDARD FLUID-CARBON STEEL VALVE-FIRE SAFE DESIGN
TEMPERATURE: -7℃～160℃(-7℃～121℃ FOR CLASS 900～1500)

WILLIAM E. WILLIAMS VALVE CORPORATION

Phone: 1-800-221-1115
718-392-1660

Fax: 718-729-5106
Email: wew@williamsvalve.com

BALL VALVES TYPE W

ANSI CLASS 150 (PN 20)

Working pressure 275 psi (19 bar) - Hydrostatic Shell Test 420 psi(29 bar)

SIZE (inches)	DN	FACE TO FACE WE	RF	RTJ	H	L	K	X LEVER	VALVE WEIGHT WE RF/RTJ
0.5"	13	5.5	4.25		3.11			6	5.5
0.75"	19	6	4.6		3.77			6	6.6
1"	25	6.5	5	5.5	3.77			7	10
1.5"	38	7.5	6.5	7	4.65			11	15.4
2X1.5"X2"	38	8.5	7	7.5	4.65			11	18.7
2"	51	8.5	7	7.5	5.78			11	21
3"X2"X3"	51	11.14	8	8.5	5.78			11	37.4
2.5"	64	9.5	7.5	8	6			15.75	33
3"	76	11.14	8	8.5	6			15.75	41.8
4"X3"X4"	76	12	9	9.5	6			15.75	57.2
4"	102	12	9	9.5	8			25.6	66
6"X4"X6"	102	18	15.5	16	8			25.6	143
5"	127		14		10			41.33	127.6
6"	152	18	15.5	16	10.7			41.33	165
8"X6"X8"	152	20.5	18	18.5	10.7			41.33	255
8"	203	20.5	18	18.5	18	13.78	11.8		286
10"X8"X10"	203	22	21	21.5	18	13.78	11.8		480
10"	253	22	21	21.5	20	13.78	15.75		528

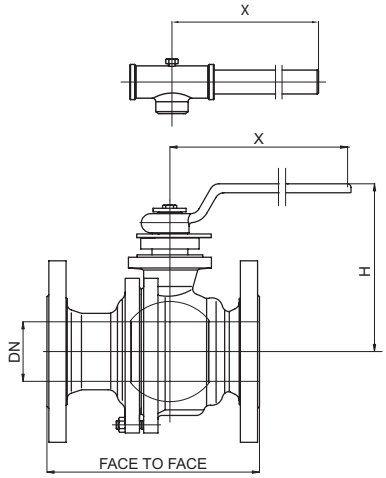

ANSI CLASS 300 (PN50)

Working pressure 720 psi(50 bar) - Hydrostatic Shell Test 1080 psi(75 bar)

SIZE (inches)	DN	FACE TO FACE WE	RF	RTJ	H	L	K	X LEVER	VALVE WEIGHT WE RF/RTJ
0.5"	13	5.5	5.5	6	3.11			6	7.7
0.75"	19	6	6	6.5	3.77			6	8.8
1"	25	6.5	6.5	7	3.77			7	12
1.5"	38	7.5	7.5	8	4.72			11	24.2
2"X1.5"X2"	38	8.5	8.5	9.13	4.72			11	26.4
2"	51	8.5	8.5	9.13	5.78			11	28.6
3"X2"X3"	51	11.14	11.14	11.75	5.78			11	52.8
2.5"	64	9.5	9.5	10.11	6.22			15.75	46.2
3"	76	11.14	11.14	11.75	6.7			15.75	66
4"X3"X4"	76	12	12	12.6	6.7			15.75	90
4"	102	12	12	12.6	8.3			25.6	99
6"X4"X6"	102	15.85	15.85	16.5	8.3			25.6	187
5"	127		15		10			41.33	143
6"	152	15.85	15.85	16.5	10.7			41.33	209
8"X6"X8"	152	20.5	19.75	20.4	10.7			41.33	300
8"	203	20.5	19.75	20.4	13.5	13.78	11.8		330
10"X8"X10"	203	22	22.35	23	13.5	13.78	11.8		546

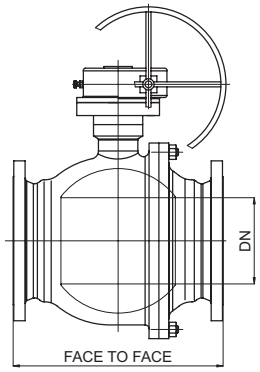

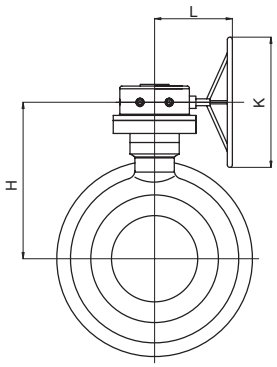

ANSI CLASS 600 (PN 100)

Working pressure 1440 psi(99 bar) - Hydrostatic Shell Test 2160 psi(140 bar)

SIZE (inches)	DN	FACE TO FACE WE	RF	RTJ	H	L	K	X LEVER	VALVE WEIGHT WE RF/RTJ
0.5"	13	6.5	6.5	6.4	3.35			6	10
0.75"	19	7.5	7.5	7.5	3.78			8	15.4
1"	25	8.5	8.5	8.5	4			8	20
1.5"	38	9.5	9.5	9.5	4.75			11	34
2"X1.5"X2"	38	11.5	11.5	11.6	4.75			11	44
2"	51	11.5	11.5	11.6	7			15.75	44
3"X2"X3"	51	14	14	14.13	7			15.75	66
2.5"	64	13	13	13.11	8.25			15.75	64
3"	76	14	14	14.13	9.6			27.5	123
4"X3"X4"	76	17	17	17.12	9.6			27.5	143
4"	100	17	17	17.12	10.4			31.5	209
6"X4"X6"	100	22	22	22.12	10.4			31.5	266

WILLIAM E. WILLIAMS VALVE CORPORATION
Phone: 1-800-221-1115
718-392-1660
Fax: 718-729-5106
Email: wew@williamsvalve.com

BALL VALVES TYPE W

ANSI CLASS 150 (PN 20)

Working pressure 275 psi (19 bar) - Hydrostatic Shell Test 420 psi(29 bar)

SIZE (inches)	DN	FACE TO FACE WE	RF	RTJ	H	L	K	X LEVER	VALVE WEIGHT WE RF/RTJ
0.5"	13	140	108		79			150	2.5
0.75"	19	152	117		96			150	3
1"	25	165	127	140	96			180	4.5
1.5"	38	191	165	178	118			280	7
2X1.5"X2"	38	216	178	191	118			280	8.5
2"	51	216	178	191	147			280	9.5
3"X2"X3"	51	283	203	216	147			280	17
2.5"	64	241	191	203	152			400	15
3"	76	283	203	216	153			400	19
4"X3"X4"	76	305	229	241	153			400	26
4"	102	305	229	241	204			650	30
6"X4"X6"	102	457	394	406	204			650	65
5"	127		356		252			1050	58
6"	152	457	394	406	272			1050	75
8"X6"X8"	152	521	457	470	272			1050	116
8"	203	521	457	470	456	350	300		130
10"X8"X10"	203	559	533	546	456	350	300		218
10"	253	559	533	546	510	350	400		240

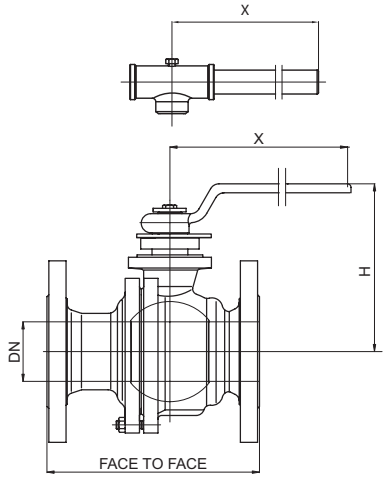

ANSI CLASS 300 (PN50)

Working pressure 720 psi(50 bar) - Hydrostatic Shell Test 1080 psi(75 bar)

SIZE (inches)	DN	FACE TO FACE WE	RF	RTJ	H	L	K	X LEVER	VALVE WEIGHT WE RF/RTJ
0.5"	13	140	140	151	79			150	3.5
0.75"	19	152	152	165	96			150	4
1"	25	165	165	178	96			180	5.5
1.5"	38	191	191	203	120			280	11
2"X1.5"X2"	38	216	216	232	120			280	12
2"	51	216	216	232	147			280	13
3"X2"X3"	51	283	283	298	147			280	24
2.5"	64	241	241	257	158			400	21
3"	76	283	283	298	170			400	30
4"X3"X4"	76	305	305	321	170			400	41
4"	102	305	305	321	210			650	45
6"X4"X6"	102	403	403	419	210			650	85
5"	127		381		252			1050	65
6"	152	403	403	419	272			1050	95
8"X6"X8"	152	521	502	518	272			1050	136
8"	203	521	502	518	342	350	300		150
10"X8"X10"	253	559	568	584	342	350	300		248

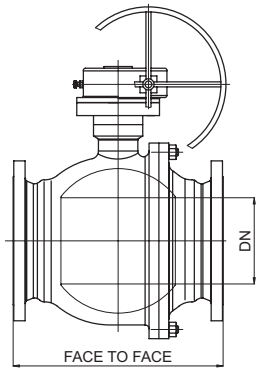

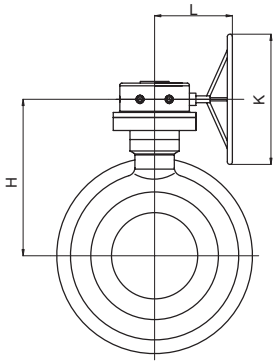

ANSI CLASS 600 (PN 100)

Working pressure 1440 psi(99 bar) - Hydrostatic Shell Test 2160 psi(140 bar)

SIZE (inches)	DN	FACE TO FACE WE	RF	RTJ	H	L	K	X LEVER	VALVE WEIGHT WE RF/RTJ
0.5"	13	165	165	163	85			150	4.5
0.75"	19	191	191	191	96			200	7
1"	25	216	216	216	100			200	9
1.5"	38	241	241	241	120			280	15
2"X1.5"X2"	38	292	292	295	120			280	20
2"	51	292	292	295	180			400	20
3"X2"X3"	51	356	356	359	180			400	30
2.5"	64	330	330	333	210			400	29
3"	76	356	356	359	244			700	56
4"X3"X4"	76	432	432	435	244			700	65
4"	102	432	432	435	265			800	95
6"X4"X6"	100	559	559	562	265			800	121

Metric

WILLIAM E. WILLIAMS VALVE CORPORATION
Phone: 1-800-221-1115
718-392-1660
Fax: 718-729-5106
Email: wew@williamsvalve.com

TYPE D STANDARD MATERIALS

Type D

Item	Description	Material
1	Body	A105
2	Seat	R-PTFE
3	Ball	A105+ENP; 316
4	Gasket	SS316+Graphite
5	Nut	A194 2H
6	Stud	A193 B7
7	Bonnet	A105
8	Stem	A276 410; 316
9	O-RING	VITON
10	UpperThrust Washer	PTFE
11	Stem Bearing	PTFE
12	Packing	Graphite
13	Gland	A276 410
14	Gland Flange	A216 WCB
15	Elastic Snap Ring	65Mn
16	Capscrew	A193 B7
17	Stopper	AISI 1045
18	Handle	A216 WCB
19	Name Plate	304
20	Rivet	H62
21	Spring	304
22	Steel Ball	304
23	Screw	Steel

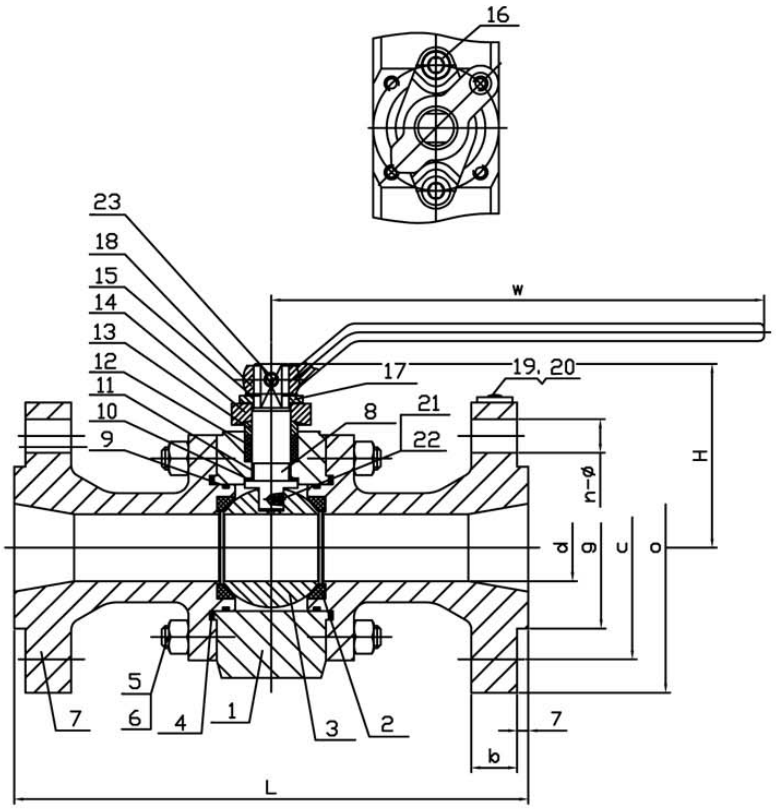

REDUCED PORT

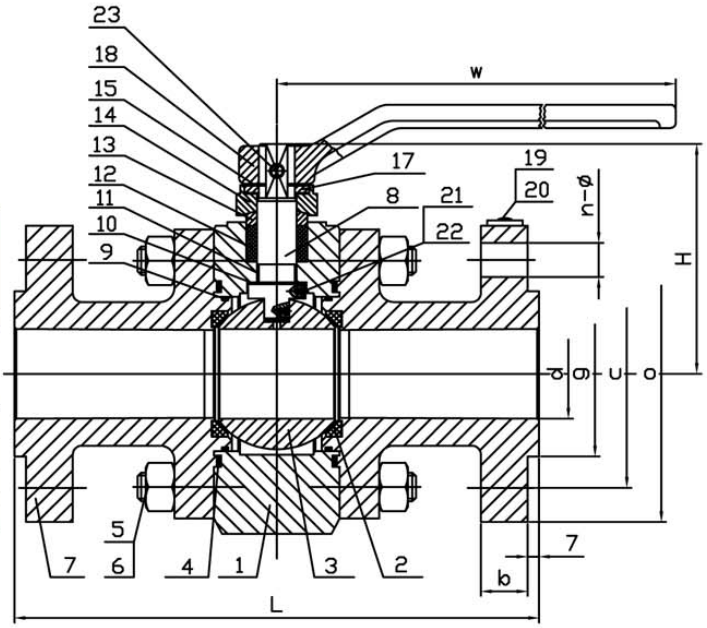

FULL PORT

DIMENSIONS (metric)										
NPS	d	L	H	W	o	c	n-Ø	t	g	weight/kg
1"	40	241	104	400	156	114	4-22	23	73	9.5
1.5"	25	216	80	230	124	89	4-19	18	51	19.5
2"x1.5"x2"	40	292	110	280	165	127	8-19	26	92	22

DIMENSIONS (inches)										
NPS	d	L	H	W	o	c	n-Ø	t	g	weight/lb
1"	1.50	9.50	4.00	15.75	6.14	4.50	4-1"	0.9	2.8	21
1.5"	1.00	8.50	3.14	9.00	4.88	4.00	4-3/4"	0.7	2.0	43
2"x1.5"x2"	1.50	11.5	4.00	11.0	6.50	5.00	8-3/4"	1.0	3.6	48

WILLIAM E. WILLIAMS VALVE CORPORATION

Phone: 1-800-221-1115
718-392-1660

Fax: 718-729-5106
Email: wew@williamsvalve.com

BALL VALVES TYPE T & P

ANSI CLASS 150 (PN 20)
TYPE T (1.5"FB~6"RB) TYPE P (6"FB~16"RB) TYPE P (16"FB~36")
Working pressure 275 psi (19 bar)-Hydrostatic Shell Test 420 psi (29 bar)

SIZE (inches)	DN	FACE TO FACE WE	RF	RTJ	G	H	L	K	X LEVER	VALVE WEIGHT WE RF/RTJ
1.5"	38	7.5	6.5	7	3	4.65			11.8	13.2
2"X1.5"X2"	38	8.5	7	7.5	3	4.65			11.8	17.6
2"	51	8.5	7	7.5	3.3	5.78			11	22
3"X2"X3"	51	11.14	8	8.5	3.3	5.78			11	26.4
3"	76	11.14	8	8.5	4.6	6	13	13.78	15.75	48.4
4"X3"X4"	76	12	9	9.5	4.6	6	13	13.78	15.75	61.6
4"	102	12	9	9.5	5.1	8	13	13.78	25.6	83.6
6"X4"X6"	102	18	15.5	16	5.1	8	13	13.78	25.6	99
6"	152	18	15.5	16	7.7	10.7	13	13.78		163
8"X6"X8"	152	20.5	18	18.5	7.7	10.7	13	13.78		187
8"	203	20.5	18	18.5	8.6	18	13.78	13.78		246
10"X8"X10"	203	22	21	21.5	8.6	18	13.78	13.78		275
10"	254	22	21	21.5	10.6	20	13.78	18.1		484
12"X10"X12"	254	25	24	24.5	10.6	20	13.78	18.1		517
12"	305	25	24	24.5	12.8	21	13.78	18.1		847
16"X12"X16"	305	33	30	30.5	12.8	21	13.78	18.1		946
14"	337	30	27	27.5	14	22.5	13.78	18.1		**1012**
16"	387	33	30	30.5	15.75	19.7	13.78	23.6		**1628**
20"X16"X20"	387	39	36	36.5	15.75	19.7	13.78	23.6		**2002**
18"	438	36	34	34.5	17.3	25.2	13.78	23.6		2046
20"	489	39	36	36.5	18.5	27.5	23.6	23.6		3560
24"X20"X24"	489	45	42	42.5	18.5	27.5	23.6	23.6		4180
22"	540	*43	*39		19.7	29	23.6	23.6		5544
24"	591	45	42	42.5	21.7	32.3	23.6	23.6		6138
30"X24"X30"	591	54.8	51		21.7	32.3	23.6	23.6		6391
26"	635	49	45		24.6	35.2	23.6	23.6		7216
28"	686	53	49		25	35.5	27.5	23.6		7007
30"	737	55	51		28	37.9	27.5	23.6		8085
36"X30"X36"	737	68	60		28	37.9	27.5	23.6		8547
32"	781	60	54		30	41.15	27.5	23.6		10395
34"	832	64	58		31	43.1	27.5	23.6		13365
36"	876	68	60		33	44	27.5	23.6		15923

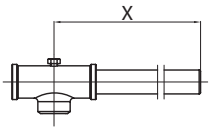

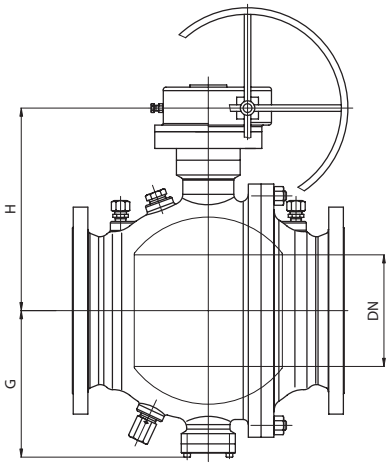

ANSI CLASS 300 (PN50)
TYPE T (1.5"FB~6"RB) TYPE P (6"FB~16"RB) TYPE P (16"FB~36")
Working pressure 720 Psi(50 bar)-hydrostatic Shell Test 1080 Psi (75 bar)

SIZE (inches)	DN	FACE TO FACE WE	RF	RTJ	G	H	L	K	X LEVER	VALVE WEIGHT WE RF/RTJ
1.5"	38	7.5	7.5	8	3	5.3			11.8	22
2"X1.5"X2"	38	8.5	8.5	9.13	3	5.3			11.8	28.6
2"	51	8.5	8.5	9.13	3.75	6.7			11.8	33
3"X2"X3"	51	11.14	11.14	11.75	3.75	6.7			11.8	44
3"	76	11.14	11.14	11.75	5	7.3	11.8	11.8	22.5	66
4"X3"X4"	76	12	12	12.6	5	7.3	11.8	11.8	22.5	99
4"	102	12	12	12.6	5.8	8.9	11.8	11.8	26	121
6"X4"X6"	102	18	18	16.5	5.8	8.9	11.8	11.8	26	143
6"	152	18	18	16.5	8	11.2	11.8	17.7		198
8"X6"X8"	152	20.5	19.75	20.4	8	11.2	11.8	17.7		242
8"	203	20.5	19.75	20.4	9.1	13.6	11.8	23.6		444
10"X8"X10"	203	22	22.4	23	9.1	13.6	11.8	23.6		510
10"	254	22	22.4	23	11.1	17.75	17.7	23.6		770
12"X10"X12"	254	25	25.5	26.1	11.1	17.75	17.7	23.6		838
12"	305	25	25.5	26.1	13.2	22.5	17.7	23.6		1122
16"X12"X16"	305	33	33	33.6	13.2	22.5	17.7	23.6		1302
14"	337	30	30	30.6	14.2	23.6	17.7	23.6		1584
16"	387	33	33	33.6	15.6	25.1	23.6	27.5		2926
20"X16"X20"	387	39	39	39.7	15.6	25.1	23.6	27.5		3384
18"	438	36	36	36.6	17.25	24.6	23.6	27.5		3524
20"	489	39	39	39.7	18.8	28	23.6	27.5		4330
24"X20"X24"	489	45	45	46	18.8	28	23.6	27.5		5203
22"	540	*43	*43	*43.9	19.5	31.5	23.6	27.5		5566
24"	591	45	45	45.9	23	32.5	27.5	27.5		6952
30"X24"X30"	591	54.8	54.8	56	23	32.5	27.5	27.5		8800
26"	635	49	49	50	24.8	34	27.5	27.5		7964
28"	686	53	53	54	27	34	27.5	27.5		8936
30"	737	55	55	56	28.1	38	27.5	27.5		11495
36"X30"X36"	737	68	68	69	28.1	38	27.5	27.5		13820
32"	781	60	60	61.1	31	39.75	27.5	27.5		13112
34"	832	64	64	65.1	33	42.3	27.5	27.5		15213
36"	876	68	68	69	34.5	43.3	27.5	27.5		17479

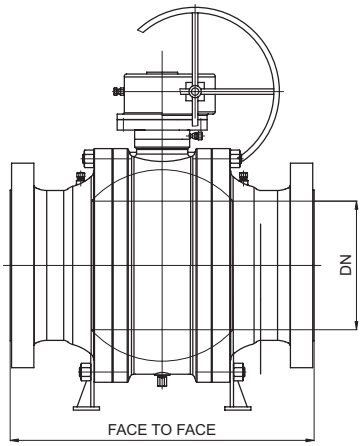

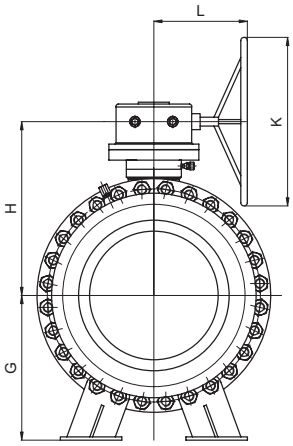

WILLIAM E. WILLIAMS VALVE CORPORATION
Phone: 1-800-221-1115
718-392-1660
Fax: 718-729-5106
Email: wew@williamsvalve.com

BALL VALVES TYPE T & P

ANSI CLASS 150 (PN 20)
TYPE T (1.5"FB~6"RB) TYPE P (6"FB~16"RB) TYPE P (16"FB~36")
Working pressure 275 psi (19 bar)-Hydrostatic Shell Test 420 psi (29 bar)

SIZE (inches)	DN	FACE TO FACE WE	RF	RTJ	G	H	L	K	X LEVER	VALVE WEIGHT WE RF/RTJ
1.5"	38	191	165	178	73.5	135			300	6
2"X1.5"X2"	38	216	178	191	73.5	135			300	8
2"	51	216	178	191	83	135			280	10
3"X2"X3"	51	283	203	216	83	135			280	12
3"	76	283	203	216	117	203	300	350	400	22
4"X3"X4"	76	305	229	241	117	203	300	350	400	28
4"	102	305	229	241	130	235	300	350	650	38
6"X4"X6"	102	457	394	406	130	235	300	350	650	45
6"	152	457	394	406	195	280	300	350		74
8"X6"X8"	152	521	457	470	195	280	300	350		85
8"	203	521	457	470	220	345	300	350		112
10"X8"X10"	203	559	533	546	220	345	300	350		125
10"	254	559	533	546	270	395	450	460		220
12"X10"X12"	254	635	610	622	270	395	450	460		235
12"	305	635	610	622	325	530	450	460		385
16"X12"X16"	305	838	762	775	325	530	450	460		430
14"	337	762	686	699	355	570	450	460		460
16"	387	838	762	775	400	500	450	600		740
20"X16"X20"	387	991	914	927	400	500	450	600		910
18"	438	914	864	876	440	640	450	600		930
20"	489	991	914	927	470	700	600	600		1618
24"X20"X24"	489	1143	1067	1080	470	700	600	600		1900
22"	540	*1092	*991		500	735	600	600		2520
24"	591	1143	1067	1080	552	820	600	600		2790
30"X24"X30"	591	1397	1295		552	820	600	600		2905
26"	635	1245	1143		625	895	600	600		3280
28"	686	1346	1245		632	902	700	600		3185
30"	737	1397	1295		715	962	700	600		3675
36"X30"X36"	737	1727	1524		715	962	700	600		3885
32"	781	1524	1372		755	1045	700	600		4725
34"	832	1626	1473		785	1095	700	600		6075
36"	876	1727	1524		836	1118	700	600		7238

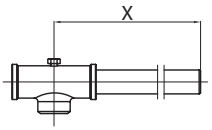

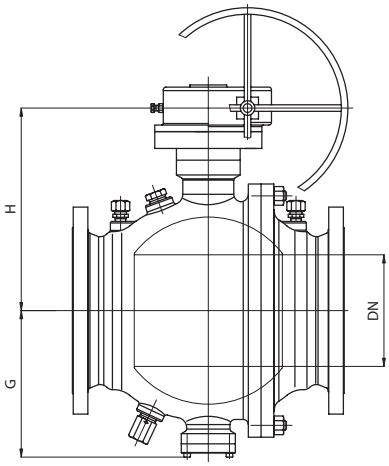

ANSI CLASS 300 (PN50)
TYPE T (1.5"FB~6"RB) TYPE P (6"FB~16"RB) TYPE P (16"FB~36")
Working pressure 720 Psi(50 bar)-hydrostatic Shell Test 1080 Psi (75 bar)

SIZE (inches)	DN	FACE TO FACE WE	RF	RTJ	G	H	L	K	X LEVER	VALVE WEIGHT WE RF/RTJ
1.5"	38	191	191	203	75	135			300	10
2"X1.5"X2"	38	216	216	232	75	135			300	13
2"	51	216	216	232	95	170			300	15
3"X2"X3"	51	283	283	298	95	170			300	20
3"	76	283	283	298	125	186	300	300	570	30
4"X3"X4"	76	305	305	321	125	186	300	300	570	45
4"	102	305	305	321	148	225	300	300	660	55
6"X4"X6"	102	403	403	419	148	225	300	300	660	65
6"	152	403	403	419	202	285	300	450		90
8"X6"X8"	152	521	502	518	202	285	300	450		110
8"	203	521	502	518	232	345	300	600		202
10"X8"X10"	203	559	568	584	232	345	300	600		232
10"	254	559	568	584	283	451	450	600		350
12"X10"X12"	254	635	648	664	283	451	450	600		381
12"	305	635	648	664	335	570	450	600		510
16"X12"X16"	305	838	838	854	335	570	450	600		592
14"	337	762	762	778	360	600	450	600		720
16"	387	838	838	854	398	638	600	700		1330
20"X16"X20"	387	991	991	1010	398	638	600	700		1538
18"	438	914	914	930	438	625	600	700		1602
20"	489	991	991	1010	477	712	600	700		1968
24"X20"X24"	489	1143	1143	1165	477	712	600	700		2365
22"	540	*1092	*1092	*1114	495	800	600	700		2520
24"	591	1143	1143	1165	585	826	700	700		3160
30"X24"X30"	591	1397	1397	1422	585	826	700	700		4000
26"	635	1245	1245	1270	630	865	700	700		3620
28"	686	1346	1346	1372	683	895	700	700		4062
30"	737	1397	1397	1422	715	968	700	700		5225
36"X30"X36"	737	1727	1727	1756	715	968	700	700		6282
32"	781	1524	1524	1553	785	1010	700	700		5960
34"	832	1626	1626	1654	836	1075	700	700		6915
36"	876	1727	1727	1756	875	1100	700	700		7945

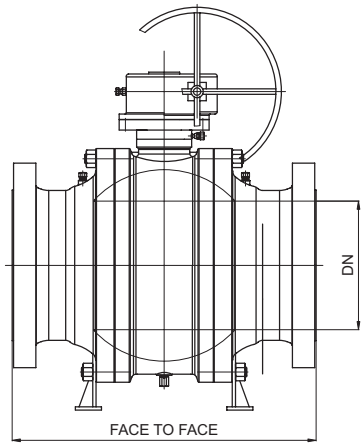

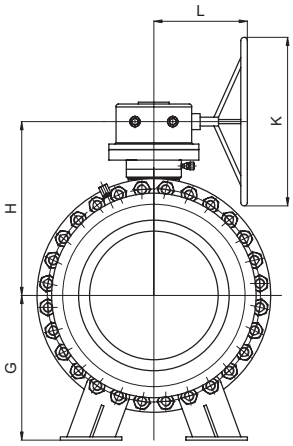

Metric

WILLIAM E. WILLIAMS VALVE CORPORATION
Phone: 1-800-221-1115
718-392-1660
Fax: 718-729-5106
Email: wew@williamsvalve.com

BALL VALVES TYPE T & P

ANSI CLASS 600 (PN 100)
TYPE T (1.5"FB~6"RB) TYPE T (6"FB~16"RB) TYPE P (16"FB~36")
Working pressure 1440 Psi(99 bar)-Hydrostatic Shell Test 2160 Psi (149 bar)

SIZE (inches)	DN	FACE TO FACE WE	RF	RTJ	G	H	L	K	X LEVER	VALVE WEIGHT WE RF/RTJ
1.5"	38	9.5	9.5	9.5	3.4	6.3			11.8	48.4
2"X1.5"X2"	38	11.5	11.5	11.6	3.4	6.3			11.8	50.6
2"	51	11.5	11.5	11.6	4.5	6.7			17	55
3"X2"X3"	51	14	14	14.1	4.5	6.7			17	83.6
3"	76	14	14	14.1	5.2	7.8	11.8	13.8	26.4	110
4"X3"X4"	76	17	17	17.1	5.2	7.8	11.8	13.8	26.4	154
4"	102	17	17	17.1	6.3	9.25	11.8	13.8	30	176
6"X4"X6"	102	22	22	22.1	6.3	9.25	11.8	13.8	30	275
6"	152	22	22	22,1	8	12.2	11.8	13.8		385
8"X6"X8"	152	26	26	26.1	8	12.2	11.8	13.8		440
8"	203	26	26	26.1	10	14.8	17.7	18.1		748
10"X8"X10"	203	31	31	31.1	10	14.8	17.7	18.1		858
10"	254	31	31	31.1	11.8	19	17.7	23.6		1133
12"X10"X12"	254	33	33	33.1	11.8	19	17.7	23.6		1210
12"	305	33	33	33.1	13.5	22.8	23.6	23.6		2112
16"X12"X16"	305	39	39	39.1	13.5	22.8	23.6	23.6		2358
14"	337	35	35	35.1	14.9	24	23.6	23.6		2750
16"	387	39	39	39.1	16.3	25.4	23.6	23.6		3410
20"X16"X20"	387	47	47	47.25	16.3	25.4	23.6	23.6		3916
18"	438	43	43	43.1	18	28.5	27.5	23.6		4026
20"	489	47	47	47.25	20.6	32.5	27.5	23.6		5104
24"X20"X24"	489	55	55	55.4	20.6	32.5	27.5	23.6		7117
22"	540	51	51	51.4	23.4	33.3	27.5	23.6		8577
24"	591	55	55	55.4	24.2	34	27.5	23.6		8932
30"X24"X30"	591	65	65	65.5	24.2	34	27.5	23.6		9900
26"	635	57	57	57.5	24.8	36.4	27.5	23.6		10461
28"	686	61	61	61.5	27.5	37.7	27.5	23.6		
30"	737	65	65	65.5	28.6	41	27.5	23.6		13323
36"X30"X36"	737	82	82	82.6	28.6	41	27.5	23.6		16313
32"	781	70	70	70.6	31.1	48	27.5	23.6		15961
34"	832	76	76	76.6	32	48.6	22.4	23.6		17116
36"	876	82	82	82.6	34.5	50	22.4	27.5		20240

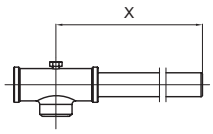

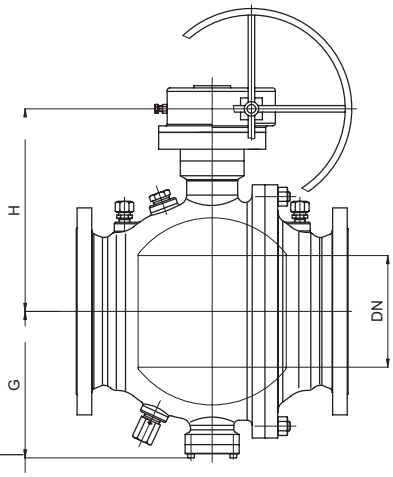

ANSI CLASS 900 (PN 150)
TYPE T (1.5"FB~6"RB) TYPE T (6"FB~16"RB) TYPE P (16"FB~36")
Working pressure 2160 Psi (149 bar)-Hydrostatic Shell Test 3240 Psi (223 bar)

SIZE (inches)	DN	FACE TO FACE WE	RF	RTJ	G	H	L	K	X LEVER	VALVE WEIGHT WE RF/RTJ
1.5"	38	12	12	12	4.7	8.5			15.75	79
2"X1.5"X2"	38	14.5	14.5	14.6	4.7	8.5			15.75	84
2"	51	14.5	14.5	14.6	5	8.5	11.8	13.8	23.6	88
3"X2"X3"	51	15	15	15.1	5	8.5	11.8	13.8	23.6	97
3"	76	15	15	15.1	5.7	10.2	11.8	13.8	35.4	150
4"X3"X4"	76	18	18	18.1	5.7	10.2	11.8	13.8	35.4	180
4"	102	18	18	18.1	6.7	11.8	11.8	13.8		220
6"X4"X6"	102	24	24	24.1	6.7	11.8	11.8	13.8		281
6"	152	24	24	24.1	10	14.1	17.7	18.1		484
8"X6"X8"	152	29	29	29.1	10	14.1	17.7	18.1		583
8"	203	29	29	29.1	11	15.5	17.7	23.6		1100
10"X8"X10"	203	33	33	33.1	11	15.5	17.7	23.6		1221
10"	254	33	33	33.1	12.8	20	23.6	23.6		2079
12"X10"X12"	254	38	38	38.1	12.8	20	23.6	23.6		2222
12"	305	38	38	38.1	15	23.4	23.6	23.6		2640
16"X12"X16"	305	44.5	44.5	44.9	15	23.4	23.6	23.6		2882
14"	324	40.15	40.15	40.9	15.5	26.6	27.5	23.6		3641
16"	375	44.5	44.5	44.9	16.8	30	27.5	23.6		4186
20"X16"X20"	375	52	52	52.5	16.8	30	27.5	23.6		5225
18"	425	48	48	48.5	16.5	31	27.5	23.6		5313
20"	473	52	52	52.5	22.1	33	27.5	23.6		6569
24"X20"X24"	473	61	61	61.7	22.1	33	27.5	23.6		8162
24"	572	61	61	61.7	25	33.6	22.4	23.6		11660
30"X24"X30"	572	*74	*74	*74.9	25	33.6	22.4	23.6		15840

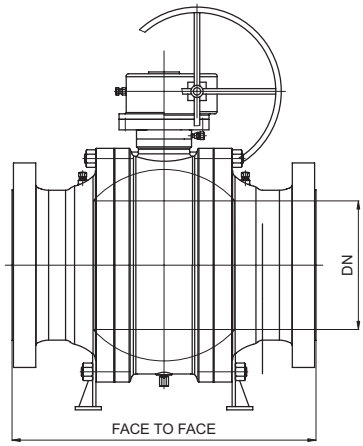

ANSI CLASS 1500 (PN 250)
TYPE T (1.5"FB~6"RB) TYPE T (6"FB~16"RB) TYPE P (16"FB~24") Working pressure 3600 Psi (248 bar)-Hydrostatic Shell Test 5400 Psi (372 bar)

SIZE (inches)	DN	FACE TO FACE WE	RF	RTJ	G	H	L	K	X LEVER	VALVE WEIGHT WE RF/RTJ
1.5"	38	12	12	12	4.7	8.3			15.75	77
2"X1.5"X2"	38	14.5	14.5	14.6	4.7	8.3			15.75	84
2"	51	14.5	14.5	14.6	5	9.5	11.8	13.8	23.6	88
3"X2"X3"	51	18.5	18.5	18.6	5	9.5	11.8	13.8	23.6	110
3"	76	18.5	18.5	18.6	6.5	10.6	11.8	13.8	35.4	189
4"X3"X4"	76	21.5	21.5	21.6	6.5	10.6	11.8	13.8	35.4	242
4"	102	21.5	21.5	21.6	7	11.8	17.7	18.1		396
6"X4"X6"	102	27.75	27.75	28	7	11.8	17.7	18.1		495
6"	146	27.75	27.75	28	8.4	14.4	23.6	23.6		836
8"X6"X8"	146	32.75	32.75	33	8.4	14.4	23.6	23.6		1067
8"	194	32.75	32.75	33	11	18.7	23.6	23.6		1650
10"X8"X10"	194	39	39	39.4	11	18.7	23.6	23.6		2108
10"	241	39	39	39.4	12.2	23	27.5	23.6		2563
12"X10"X12"	241	44.5	44.5	45.1	12.2	23	27.5	23.6		2794
12"	289	44.5	44.5	45.1	19	27.5	27.5	23.6		3577
16"X12"X16"	289	54.5	54.5	55.4	19	27.5	27.5	23.6		4180
14"	318	49.5	49.5	50.2	20	30	27.5	23.6		4400
16"	362	54.5	54.5	55.4	19.7	25.6	27.5	23.6		8180
20"X16"X20"	362	65.5	65.5	66.4	19.7	25.6	27.5	23.6		11044
18"	407	60.5	60.5	61.4	23	31	27.5	23.6		11143
20"	451	65.5	65.5	66.4	25	34.6	27.5	23.6		15950
24"X20"X24"	451	76.5	76.5	77.6	25	34.6	27.5	23.6		18315
24"	534	76.5	76.5	77.6	28.3	50.6	18.4	23.6		25058

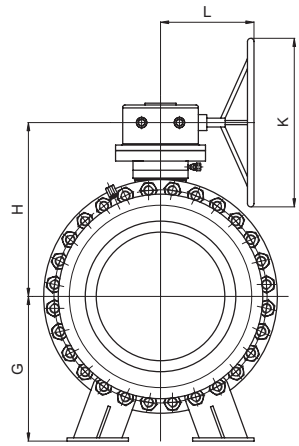

WILLIAM E. WILLIAMS VALVE CORPORATION
Phone: 1-800-221-1115
718-392-1660
Fax: 718-729-5106
Email: wew@williamsvalve.com

BALL VALVES TYPE T & P

ANSI CLASS 600 (PN 100)
TYPE T (1.5"FB~6"RB) TYPE T (6"FB~16"RB) TYPE P (16"FB~36")
Working pressure 1440 Psi(99 bar)-Hydrostatic Shell Test 2160 Psi (149 bar)

SIZE (inches)	DN	FACE TO FACE WE	RF	RTJ	G	H	L	K	X LEVER	VALVE WEIGHT WE RF/RTJ
1.5"	38	241	241	241	87	160			300	22
2"X1.5"X2"	38	292	292	295	87	160			300	23
2"	51	292	292	295	115	170			430	25
3"X2"X3"	51	356	356	359	115	170			430	38
3"	76	356	356	359	133	198	300	350	670	50
4"X3"X4"	76	432	432	435	133	198	300	350	670	70
4"	102	432	432	435	160	235	300	350	760	80
6"X4"X6"	102	559	559	562	160	235	300	350	760	125
6"	152	559	559	562	200	310	300	350		175
8"X6"X8"	152	660	660	664	200	310	300	350		200
8"	203	660	660	664	255	375	450	460		340
10"X8"X10"	203	787	787	791	255	375	450	460		390
10"	254	787	787	791	300	485	450	600		515
12"X10"X12"	254	838	838	841	300	485	450	600		550
12"	305	838	838	841	345	580	600	600		960
16"X12"X16"	305	991	991	994	345	580	600	600		1072
14"	337	889	889	892	378	610	600	600		1250
16"	387	991	991	994	415	645	600	600		1550
20"X16"X20"	387	1194	1194	1200	415	645	600	600		1780
18"	438	1092	1092	1095	455	725	700	600		1830
20"	489	1194	1194	1200	525	825	700	600		2320
24"X20"X24"	489	1397	1397	1407	525	825	700	600		3235
22"	540	1295	1295	1305	595	845	700	600		3899
24"	591	1397	1397	1407	615	866	700	600		4060
30"X24"X30"	591	1651	1651	1664	615	870	700	600		4500
26"	635	1448	1448	1461	630	925	700	600		4755
28"	686	1549	1549	1562	700	958	700	600		
30"	737	1651	1651	1664	728	1040	700	600		6056
36"X30"X36"	737	2083	2083	2099	728	1040	700	600		7415
32"	781	1778	1778	1794	790	1220	700	600		7255
34"	832	1930	1930	1946	815	1235	570	600		7780
36"	876	2083	2083	2099	875	1270	570	700		9200

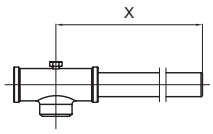

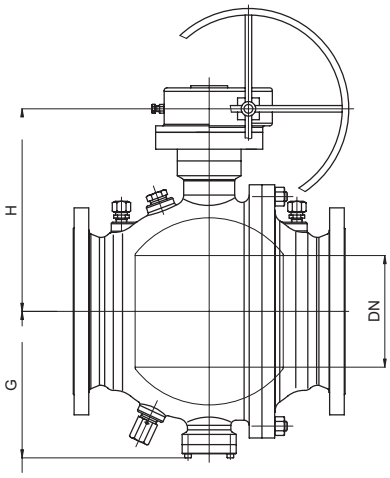

ANSI CLASS 900 (PN 150)
TYPE T (1.5"FB~6"RB) TYPE T (6"FB~16"RB) TYPE P (16"FB~36")
Working pressure 2160 Psi (149 bar)-Hydrostatic Shell Test 3240 Psi (223 bar)

SIZE (inches)	DN	FACE TO FACE WE	RF	RTJ	G	H	L	K	X LEVER	VALVE WEIGHT WE RF/RTJ
1.5"	38	305	305	305	120	215			400	36
2"X1.5"X2"	38	369	369	372	120	215			400	38
2"	51	369	369	372	126	217	300	350	600	40
3"X2"X3"	51	381	381	384	126	217	300	350	600	44
3"	76	381	381	384	145	260	300	350	900	68
4"X3"X4"	76	457	457	460	145	260	300	350	900	82
4"	102	457	457	460	170	300	300	350		100
6"X4"X6"	102	610	610	613	170	300	300	350		128
6"	152	610	610	613	250	360	450	460		220
8"X6"X8"	152	737	737	740	250	360	450	460		265
8"	203	737	737	740	280	395	450	600		500
10"X8"X10"	203	838	838	841	280	395	450	600		555
10"	254	838	838	841	325	505	600	600		945
12"X10"X12"	254	965	965	968	325	505	600	600		1010
12"	305	965	965	968	380	595	600	600		1200
16"X12"X16"	305	1130	1130	1140	380	595	600	600		1310
14"	324	1029	1029	1038	395	675	700	600		1655
16"	375	1130	1130	1140	426	762	700	600		1903
20"X16"X20"	375	1321	1321	1334	426	762	700	600		2375
18"	425	1219	1219	1232	420	785	700	600		2415
20"	473	1321	1321	1334	562	840	700	600		2986
24"X20"X24"	473	1549	1549	1568	562	840	700	600		3710
24"	572	1549	1549	1568	635	855	568	600		5300
30"X24"X30"	572	*1880	*1880	*1902	635	855	568	600		7200

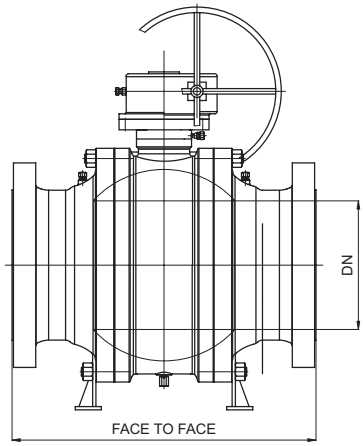

ANSI CLASS 1500 (PN 250)
TYPE T (1.5"FB~6"RB) TYPE T (6"FB~16"RB) TYPE P (16"FB~24") Working pressure 3600 Psi (248 bar)-Hydrostatic Shell Test 5400 Psi (372 bar)

SIZE (inches)	DN	FACE TO FACE WE	RF	RTJ	G	H	L	K	X LEVER	VALVE WEIGHT WE RF/RTJ
1.5"	38	305	305	305	120	210			400	35
2"X1.5"X2"	38	369	369	372	120	210			400	38
2"	51	369	369	372	125	240	300	350	600	40
3"X2"X3"	51	470	470	473	125	240	300	350	600	50
3"	76	470	470	473	165	270	300	350	900	86
4"X3"X4"	76	546	546	549	165	270	300	350	900	110
4"	102	546	546	549	175	300	450	460		180
6"X4"X6"	102	705	705	711	175	300	450	460		225
6"	146	705	705	711	212	365	600	600		380
8"X6"X8"	146	832	832	841	212	365	600	600		485
8"	194	832	832	841	275	475	600	600		750
10"X8"X10"	194	991	991	1000	275	475	600	600		958
10"	241	991	991	1000	310	580	700	600		1165
12"X10"X12"	241	1130	1130	1146	310	580	700	600		1270
12"	289	1130	1130	1146	485	698	700	600		1626
16"X12"X16"	289	1384	1384	1407	485	698	700	600		1900
14"	318	1257	1257	1276	510	762	700	600		2000
16"	362	1384	1384	1407	500	650	700	600		3718
20"X16"X20"	362	1664	1664	1686	500	650	700	600		5020
18"	407	1537	1537	1559	585	785	700	600		5065
20"	451	1664	1664	1686	635	880	700	600		7250
24"X20"X24"	451	1943	1943	1971	635	880	700	600		8325
24"	534	1943	1943	1971	720	1285	468	600		11390

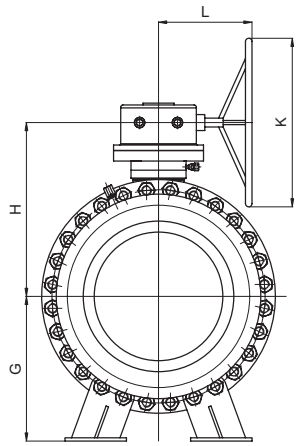

Metric

WILLIAM E. WILLIAMS VALVE CORPORATION

Phone: 1-800-221-1115
718-392-1660

Fax: 718-729-5106
Email: wew@williamsvalve.com

Pressure Temperature Ratings

Class	Temp °F	A216 WCB	A217 C5	A217 WC6	A217 WC9	A352 LCB	A352 LC3
150	-20 to 100	285	290	290	290	265	290
	200	260	260	260	260	250	260
	300	230	230	230	230	230	230
	400	200	200	200	200	200	200
	500	170	170	170	170	170	170
	600	140	140	140	140	140	140
	650	125	125	125	125	125	125
	700	110	110	110	110	-	-
	750	95	95	95	95	-	-
	800	80	80	80	80	-	-
	850	65	65	65	65	-	-
	900	50	50	50	50	-	-
	950	35	35	35	35	-	-
	1000	20	20	20	20	-	-
300	-20 to 100	740	750	750	750	695	750
	200	675	750	710	715	655	750
	300	655	730	675	675	640	730
	400	635	705	660	660	620	705
	500	600	665	640	640	585	665
	600	550	605	605	605	535	605
	650	535	590	590	590	525	590
	700	535	570	570	570	-	-
	750	505	530	530	530	-	-
	800	410	500	510	510	-	-
	850	270	440	485	485	-	-
	900	170	355	450	450	-	-
	950	105	260	380	380	-	-
	1000	50	190	225	270	-	-
600	-20 to 100	1480	1500	1500	1500	1390	1500
	200	1350	1500	1425	1430	1315	1500
	300	1315	1455	1345	1355	1275	1455
	400	270	1410	1315	1295	1235	1410
	500	1200	1330	1285	1280	1165	1330
	600	1095	1210	1210	1210	1065	1210
	650	1075	1175	1175	1175	1045	1175
	700	1065	1135	1135	1135	-	-
	750	1010	1065	1065	1065	-	-
	800	825	995	1015	1015	-	-
	850	535	880	975	975	-	-
	900	345	705	900	900	-	-
	950	205	520	755	755	-	-
	1000	105	385	445	445	-	-

Class	Temp °F	A216 WCB	A217 C5	A217 WC6	A217 WC9	A352 LCB	A352 LC3
900	-20 to 100	2200	2250	2250	2250	2085	2250
	200	2025	2250	2135	2150	1970	2250
	300	1970	2185	2020	2030	1915	2185
	400	1900	2115	1975	1945	1850	2115
	500	1840	1995	1925	1920	1745	1995
	600	1640	1815	1815	1815	1600	1815
	650	1610	1765	1765	1765	1570	1765
	700	1600	1705	1705	1705	-	-
	750	1510	1595	1595	1595	-	-
	800	1235	1490	1525	1525	-	-
	850	805	1315	1460	1460	-	-
	900	510	1060	1350	1350	-	-
	950	310	780	1130	1130	-	-
	1000	155	575	670	805	-	-
1500	-20 to 100	3705	3750	3750	3750	3470	3750
	200	3375	3750	3560	3580	3280	3750
	300	3280	3640	3365	3385	3190	3640
	400	3170	3530	3290	3240	3085	3530
	500	2995	3325	3210	3200	2910	3325
	600	2735	3025	3025	3025	2665	3025
	650	2685	2940	2940	2940	2615	2940
	700	2665	2840	2840	2840	-	-
	750	2520	2660	2660	2660	-	-
	800	2060	2485	2540	2540	-	-
	850	1340	2195	2435	2435	-	-
	900	860	1765	2245	2245	-	-
	950	515	1305	1885	1885	-	-
	1000	260	960	1115	1340	-	-
2500	-20 to 100	6170	6250	6250	6250	5785	6250
	200	5625	6205	6250	6250	5470	6250
	300	5470	5965	6015	6070	5315	6070
	400	5280	5880	5775	5880	5145	2880
	500	4990	5540	5540	5540	4850	5540
	600	4560	5040	5040	5040	4440	5040
	650	4475	4905	4905	4905	4355	4905
	700	4440	4730	4730	4730	-	-
	750	4200	4400	4430	4430	-	-
	800	3430	4230	4230	4230	-	-
	850	2230	4030	4060	4060	-	-
	900	1430	3085	3745	3745	-	-
	950	860	2285	2655	3145	-	-
	1000	430	1655	1800	2170	-	-

Reference: ASME B16.34

WCB not recommended for prolonged use above 800 F

WILLIAM E. WILLIAMS VALVE CORPORATION
Phone: 1-800-221-1115
718-392-1660
Fax: 718-729-5106
Email: wew@williamsvalve.com

SEAT MATERIAL CHARACTERISTICS

WEW Code	Material	Description	Color
RT	Reinforced Teflon (PTFE)	Reinforced Teflon is the standard seating material used in Williams ball valves. Reinforced with 15% glass PTFE provides good resistance to chemicals while lengthening the life of the seat. PTFE can be used between -40°F to 450° F.	Off-White
T	Virgin Teflon (TFE)	Virgin Teflon offers an excellent chemical compatibility in a variety of applications. The operating temperature range is between -40°F to 450°.	White
P	PEEK	Polyetheretherketone is a high performance engineered thermoplastic, designed for usage in extreme environments. This semi-rigid elastomer is a great choice for high pressure / temperature service. PEEK provides excellent corrosion resistance and is unaffected by continuous exposure to hot water and steam. Service temperature ranges are between -150°F to 475°F and up to a maximum of 7,000 PSI.	Black
N	Nylon	Nylon seats are best used under low temperature high pressure settings. They can be used in high pressure air, oil, and other gases, however it is not recommended for use with strong oxidizing agents. Temperature range is between -30°F to 200° F.	Translucent
V	Viton	Viton is an elasto-polymer with a high degree of resistance to attack and degradation caused by acids, lubricants, hot aqueous media, amines, caustics and other chemicals. Temperature range between -30°F to 400°F.	Silver-gray
D	Devlon V	Devlon V is a specially designed polymide made with additives which allow it to perform at higher pressure and temperatures than other grades of Nylon. Devlon is resistant to most of the commonly used chemicals in the oil and gas industry. Devlon can operate at up to a maximum of 6,000 PSI between -150°F to 375°F.	Yellow

WILLIAM E. WILLIAMS VALVE CORPORATION
Phone: 1-800-221-1115
718-392-1660
Fax: 718-729-5106
Email: wew@williamsvalve.com

Trunnion Ball Valve Torque & Flow Values

SIZE	Class 150			Class 300			Class 600		
In.	NM	FT LBS	CV	NM	FT LBS	CV	NM	FT LBS	CV
2	42	31	500	75	55	420	115	85	350
3	140	103	1390	210	155	1050	350	258	1000
4	220	162	2550	300	221	2000	620	458	1850
5	200	148	-	500	369	-	930	686	-
6	370	273	5249	630	465	5186	1010	745	4400
8	640	472	10750	1120	827	10262	2000	1476	8450
10	1200	886	17775	1920	1417	17220	3600	2657	14250
12	1800	1328	26750	3000	2214	25950	5700	4207	22790
14	2600	1919	32600	4400	3247	30900	8000	5904	28600
16	3880	2863	44700	6200	4576	42600	11640	8590	39250
18	6200	4576	58500	8000	5904	56450	18600	13727	52000
20	7480	5520	76000	10000	7380	727700	22500	16605	70500
24	12000	8856	113500	16800	12398	109450	36000	26568	99000
28	18000	13284	151750	26000	19188	146050	52000	38376	136500
30	19800	14612	179300	34000	25092	171700	55000	40590	158900
32	21000	15498	199750	38000	28044	187700	68000	50184	175000
36	2800	2066	258300	50000	36900	243050	97500	71955	226300

Size	Class 900			Class1500			Class 2500		
In	NM	FT LBS	CV	NM	FT LBS	CV	NM	FT LBS	CV
2	240	177	320	400	295	320	650	480	285
3	800	590	910	800	590	820	1580	1166	825
4	800	590	1760	1450	1070	1610	2300	1697	1510
6	1600	1181	4300	2800	2066	4080	5500	4059	3590
8	2800	2066	8400	4000	2952	7980	1180	871	7160
10	4800	3542	14160	8000	5904	-	-	-	-
12	7200	5314	21230	12800	9446	-	-	-	-
14	11000	8118	26600	18500	13653	-	-	-	-
16	14400	10627	36600	26500	19557	-	-	-	-
18	19200	14170	50540	36000	26568	-	-	-	-
20	27200	20074	69700	48000	35424	-	-	-	-
24	40000	29520	86750	74500	54981	-	-	-	-
28	48000	35424	121200	89500	66051	-	-	-	-
30	-	-	-	-	-	-	-	-	-
32	-	-	-	-	-	-	-	-	-
36	-	-	-	-	-	-	-	-	-

Please allow an +/-8% for Torque Values