William E. Williams

Emergency Shut Off Valves

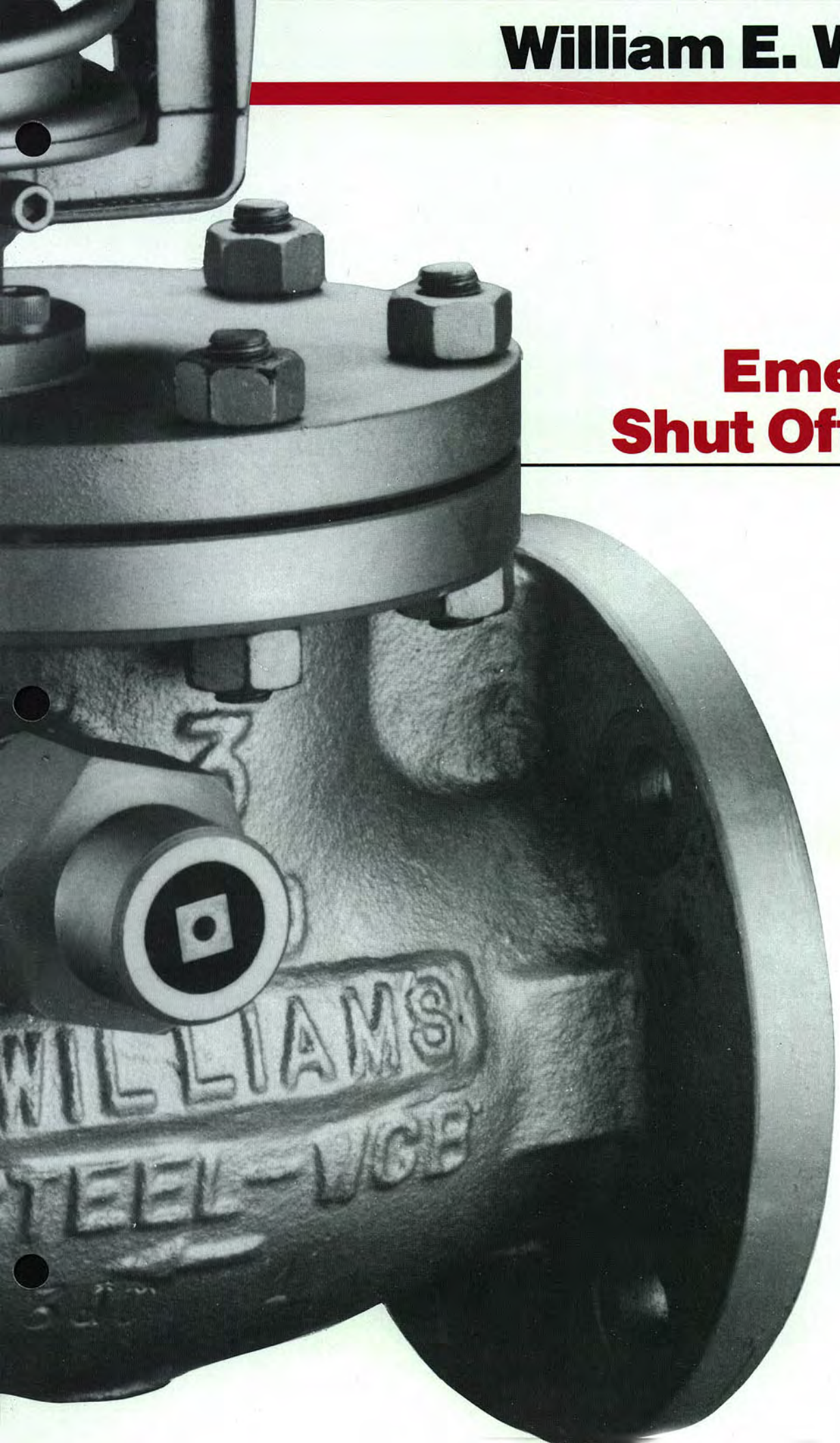

Introduction

Since 1918 Williams has been delivering efficient and dependable performance for practically every known valve service. The very name Williams is your assurance that every valve meets or exceeds the specifications required for your application. Williams offers a wide variety and range of proven valves to precisely match your needs. And when your needs call to respond quickly and effectively to a catastrophic situation; your needs depend on the W.E.W. ... Emergency Shut-Off Valve.

During the early 70's based on actual field experiences and market research Williams identified a need for a simple, effective, economical valve to stop the flow of liquids, gases and vapors in emergency situations. Using the A.P.I. 600 and A.P.I. 6D standards, R & D Engineering designed a quick closing valve that can be actuated at the valve or from a remote location. These valves are now time tested and proven the most cost effective candidate to safely manage fire, high levels of heat, excess pressure, or dangerously high pressure fluid conditions. Add the fail-safe fusible link features and these valves will close instantaneously & automatically at the heat of a fire.

Williams Emergency Shut-Off Valves are on guard and at the ready in major refineries, petrochemical plants, dockside marine installations, fuel storage terminals, pipeline distribution, and off-shore rigs throughout the world. They are recognized for their quality and dependability.

In addition to the basic ESOV, Williams offers six modified emergency valve systems: Pneumatic actuated, Nema-7 Solenoid, High Pressure switch, Temperature Sensitive, High Level Shut-Off and Gas Overpressure Shut-Off. Limit switches are also available to indicate open/closed position at a remote site. Installed as a safety package the ESOV can be easily integrated into the main system and used to shut-down other controlled equipment.

The Williams Emergency Shut-Off Valve has proven superior to other designs. The valves can be installed in either the vertical or horizontal positions. An optional soft seat design is also available. Each valve is individually tested to A.P.I. 598.

In short you provide the basic sizing information, environmental conditions, and accessories desired; the Williams technicians provide a valve tailored to your need.

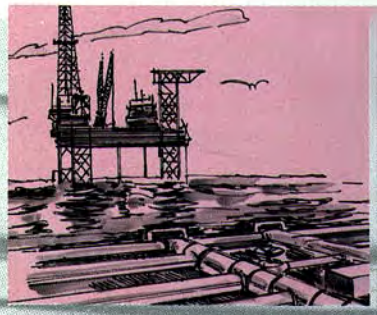

Contents

	Page
New Applications	3
Warranty	3
Basic ESOV	4
Pneumatic Operated ESOV	5
ESOV with Solenoid	6
High Pressure Switch ESOV	7
Temperature Sensitive ESOV	8
High Level ESOV	9
Gas Overpressure Shut-Off Valve	10
Major Components and Accessories	11
How to Order	11

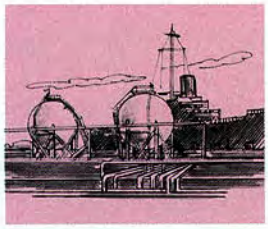

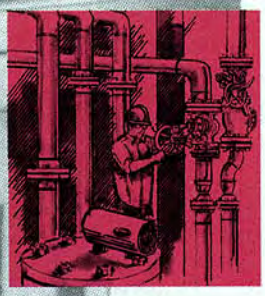

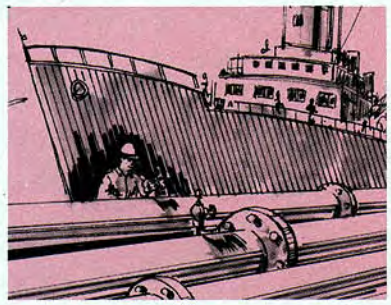

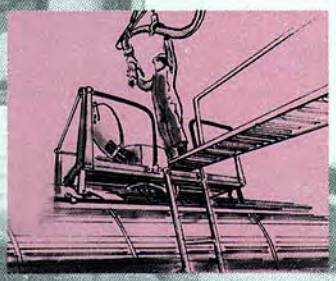

New Applications

Leaders in many industries insist on Williams Valves!

The Williams Emergency Shut-Off Valve (ESOV) has been in a wide variety of applications throughout the world. The folllowing are a few examples:

A. **A Leading Petroleum Corp.** Is using the Williams ESOV with fusible link and spring at a major tank farm on Staten Island, New York. Valves are located on highly flammable fuel oil and gasoline tank feed, tank discharge and product tanker discharge lines.

B. **A Houston Based Oil Exploration Firm** Is using ESOV with solenoids on off-shore rigs. The valves are designed to close when power fails on the rig. The valves are located between the main header line and crude storage tanks.

C. **A Major Multi-National Chemical Company** Utilizes Williams ESOV with solenoid and pressure switches on hydrogen feed lines. They are designed to close when dangerously high pressure builds in the lines, with addition of the fusible link, the valves feature a fail-safe design that assures timely closing if fire occurs.

D. **A Major Oil Company** Utilizes the basic Williams ESOV on all feed lines from its propane bullets to its processing plant. The valve features fail-safe close design in case of fire.

E. **A California Based Petroleum Corporation** Uses the basic ESOV with a slam retardent gearing mechanism on its product transfer lines from ship-to-shore. The medium is liquid natural gas.

F. **A Large Tank Farm & Storage Facility** In Long Island, New York utilizes the Williams ESOV with solenoid on product lines running from pressure vessel storage areas to truck loading racks. The valves are strategically positioned to actuate in case of fire or other calamities such as a spillage at the truck racks.

G. **Navy Tankers** Use Williams ESOV with solenoid on key steam piping systems, the valves are designed to shut-down superheated steam lines in emergency situations.

Warranty

Seller warrants the material to be free of defects in material and workmanship, under normal use and proper operation, for a period of one year from date of delivery to a common carrier for shipment to buyer. Seller's obligation is limited to: (1) Repair of the material, or (2) replacement of any part or parts proven defective in material or workmanship, or (3) refund of the purchase price. The choice of said remedies shall be determined by seller in its sole discretion.

All implied warranties, including the implied warranties of merchantability and fitness for a particular purpose, are hereby disclaimed and excluded. The within limited warranty is exclusive and in lieu of all other warranties, guarantees, agreements and similar obligations of seller. In no event shall seller be liable for consequential or incidental damages.

NO.	PART	MATERIAL
1	Body	ASTM A 216 GR WCB
2	Disc	ASTM A 182 GR F6
3	Disc Arm-Hanger	ASTM A 216 GR WCB
4	Cover	ASTM A 216 GR WCB
5	Hinge Pin	ASTM A 182 GR F6
6	Disc Washer	ASTM A 182 GR F6
7	Disc Nut	ASTM A 194 GR 2H
8	Seat Ring	ASTM A 182 GR F6
9	Cover Gasket	Soft Iron
10	Cover Studs	ASTM A 193 GR B7
11	Cover Nuts	ASTM A 194 GR 2H
12	Lever	Cold Rolled Steel
13	Lever Nut	ASTM A 194 GR 2H
14	Fusible Link	Lead
15	Spring	Steel
16	Packer Nut—Not Shown	Carbon Steel
17	Packer Box—Not Shown	Carbon Steel
18	Side Plug-Not Shown	Carbon Steel

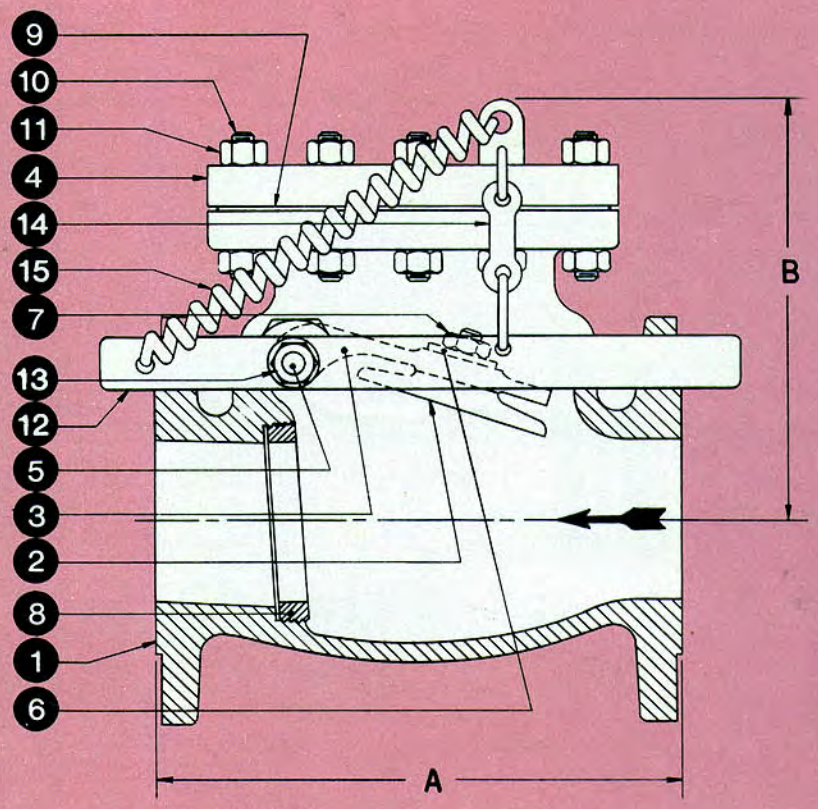

The Basic ESOV

Years of Trouble-Free Service

The Williams Fig. No. PL-1 or PSL-1 is our basic Emergency Shut-Off Valve. It was designed to provide an effective yet simple method of closing in an emergency or hazardous situation. The valve is designed with an external spring load or weight-assisted handle held in the open position with the fire-sensitive fusible link. The valve will automatically close when the link melts due to fire or high temperatures. The exterior handle rotates the hinge pin that directs the disc into the flow of the liquid, gas or vapor. The valve can be provided with spring-loaded release for manual cable operations.

Product Features

A. Local and/or remote location
B. Once closed valve can only be reset manually as fail-safe feature
C. Unobstructive flow when open
D. Economical
E. Can be moved in horizontal or vertical service
F. Factory tested
G. Back pressure assures a tight seal between disc & seat
H. Fire-Safe fusible link

Ordering Information

1. Size, pressure rating, body & trim material
2. Fusible link temp.
3. Spring (Fig. PSL-1)
4. Weight (Fig. PL-1)
5. Line pressure
6. Fluid to be controlled
7. Horizontal or Vertical installation
8. Environmental conditions
9. Accessories desired

Size	A	Flange Dia.	Bolt Circle	Raised Face Dia.	No. & Size of Holes	Flange Thick	B
2"	8	6	4-3/4	3-5/8	4-3/4	3/4	6
2-1/2"	8-1/2	7	5-1/2	4-1/8	4-3/4	7/8	6
3"	9-1/2	7-1/2	6	5	4-3/4	15/16	6-1/4
4"	11-1/2	9	7-1/2	6-3/16	8-3/4	15/16	7-5/8
5"	13	10	8-1/2	7-5/16	8-7/8	15/16	7-5/8
6"	14	11	9-1/2	8-1/2	8-7/8	1	9-1/2
8"	19-1/2	13-1/2	11-3/4	10-5/8	8-7/8	1-1/8	11-1/2
10"	24-1/2	16	14-1/4	12-3/4	12-1	1-3/16	13-1/2
12"	27-1/2	19	17	15	12-1	1-1/4	15
14"	31	21	18-3/4	16-1/4	12-1-1/8	1-3/8	15-3/4
16"	34	23-1/2	21-1/4	18-1/2	16-1-1/8	1-7/16	17-1/4

PLEASE CONSULT WITH FACTORY FOR VALVES LARGER THAN 16" NPS

WILLIAM E. WILLIAMS VALVE CORPORATION
38-52 Review Avenue
Long Island City, NY 11101
718-392-1660
1-800-221-1115
Telex: 125456(WILLMSVALV)
FAX: 718-729-5106

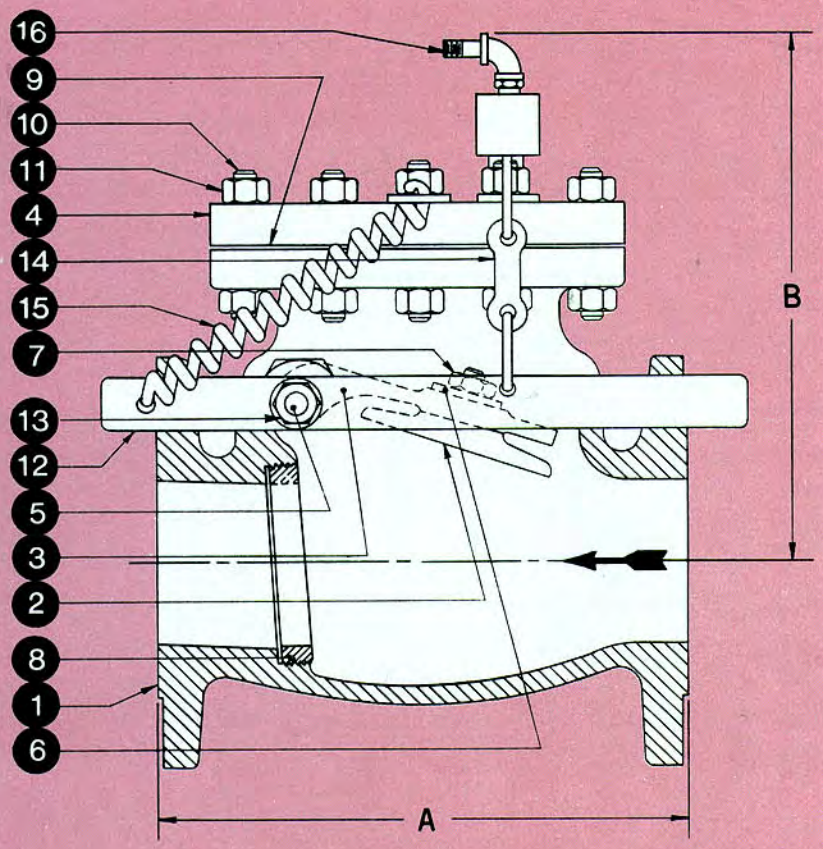

NO.	PART	MATERIAL
1	Body	ASTM A 216 GR WCB
2	Disc	ASTM A 182 GR F6
3	Disc Arm-Hanger	ASTM A 216 GR WCB
4	Cover	ASTM A 216 GR WCB
5	Hinge Pin	ASTM A 182 GR F6
6	Disc Washer	ASTM A 182 GR F6
7	Disc Nut	ASTM A 194 GR 2H
8	Seat Ring	ASTM A 182 GR F6
9	Cover Gasket	Soft Iron
10	Cover Studs	ASTM A 193 GR B7
11	Cover Nuts	ASTM A 194 GR 2H
12	Lever	Cold Rolled Steel
13	Lever Nut	ASTM A 194 GR 2H
14	Fusible Link	Lead
15	Spring	Steel
16	Air Cylinder	Commercial
17	Packer Nut—Not Shown	Carbon Steel
18	Packer Box-Not Shown	Carbon Steel
19	Side Plug—Not Shown	Carbon Steel

Pneumatic Operated ESOV

Shuts off without electrical power!

Don't risk explosions—specify Williams air-actuated Emergency Shut-Off Valve!

The Williams Air Actuated Emergency Shut-Off Valve Fig. No. CPSL-1 or CPL-1 is designed to provide remote operation when electrical current is not available or not desired because of environmental conditions. The valve incorporates our basic ESOV construction with a fusible link and pneumatic actuator. The external lever is connected to a plunger pin, which, in turn is connected to the rod on the pneumatic cylinder. The cylinder can be provided either air-to-close or air-to-hold- open.

Product Features

A. Corrosion resistant cylinder

B. Once closed valve can only be reset manually as fail-safe feature

C. Unobstructive flow when open

D. Economical

E. Can be mounted in horizontal or vertical service

F. Factory tested

G. Back pressure assures a tight seal between disc & seat

H. Fire-Safe fusible link

Ordering Information

1. Size, pressure rating, body & trim material
2. Fusible link temp.
3. Spring (Fig. CPSL-1)
4. Weight (Fig. CPL-1)
5. Line pressure
6. Fluid to be controlled
7. Horizontal or Vertical installation
8. Environmental conditions
9. Air pressure available
10. Accessories desired

Size	A	Flange Dia.	Bolt Circle	Raised Face Dia.	No. & Size of Holes	Flange Thick	B
2"	8	6	4-3/4	3-5/8	4-3/4	3/4	10
2-1/2"	8-1/2	7	5-1/2	4-1/8	4-3/4	7/8	10
3"	9-1/2	7-1/2	6	5	4-3/4	15/16	10-1/4
4"	11-1/2	9	7-1/2	6-3/16	8-3/4	15/16	11-5/8
5"	13	10	8-1/2	7-5/16	8-7/8	15/16	11-5/8
6"	14	11	9-1/2	8-1/2	8-7/8	1	13-1/2
8"	19-1/2	13-1/2	11-3/4	10-5/8	8-7/8	1-1/8	15-1/2
10"	24-1/2	16	14-1/4	12-3/4	12-1	1-3/16	17-1/2
12"	27-1/2	19	17	15	12-1	1-1/4	19
14"	31	21	18-3/4	16-1/4	12-1-1/8	1-3/8	19-3/4
16"	34	23-1/2	21-1/4	18-1/2	16-1-1/8	1-7/16	21-1/4

PLEASE CONSULT WITH FACTORY FOR VALVES LARGER THAN 16" NPS

WILLIAM E. WILLIAMS VALVE CORPORATION

38-52 Review Avenue
Long Island City, NY 11101
718-392-1660
1-800-221-1115
Telex: 125456(WILLMSVALV)
FAX: 718-729-5106

NO.	PART	MATERIAL
1	Body	ASTM A 216 GR WCB
2	Disc	ASTM A 182 GR F6
3	Disc Arm-Hanger	ASTM A 216 GR WCB
4	Cover	ASTM A 216 GR WCB
5	Hinge Pin	ASTM A 182 GR F6
6	Disc Washer	ASTM A 182 GR F6
7	Disc Nut	ASTM A 194 GR 2H
8	Seat Ring	ASTM A 182 GR F6
9	Cover Gasket	Soft Iron
10	Cover Studs	ASTM A 193 GR B7
11	Cover Nuts	ASTM A 194 GR 2H
12	Lever	Cold Rolled Steel
13	Lever Nut	ASTM A 194 GR 2H
14	Fusible Link	Lead
15	Weight	Steel
16	Solenoid	Commercial
17	Packer Nut—Not Shown	Carbon Steel
18	Packer Box-Not Shown	Carbon Steel
19	Side Plug—Not Shown	Carbon Steel

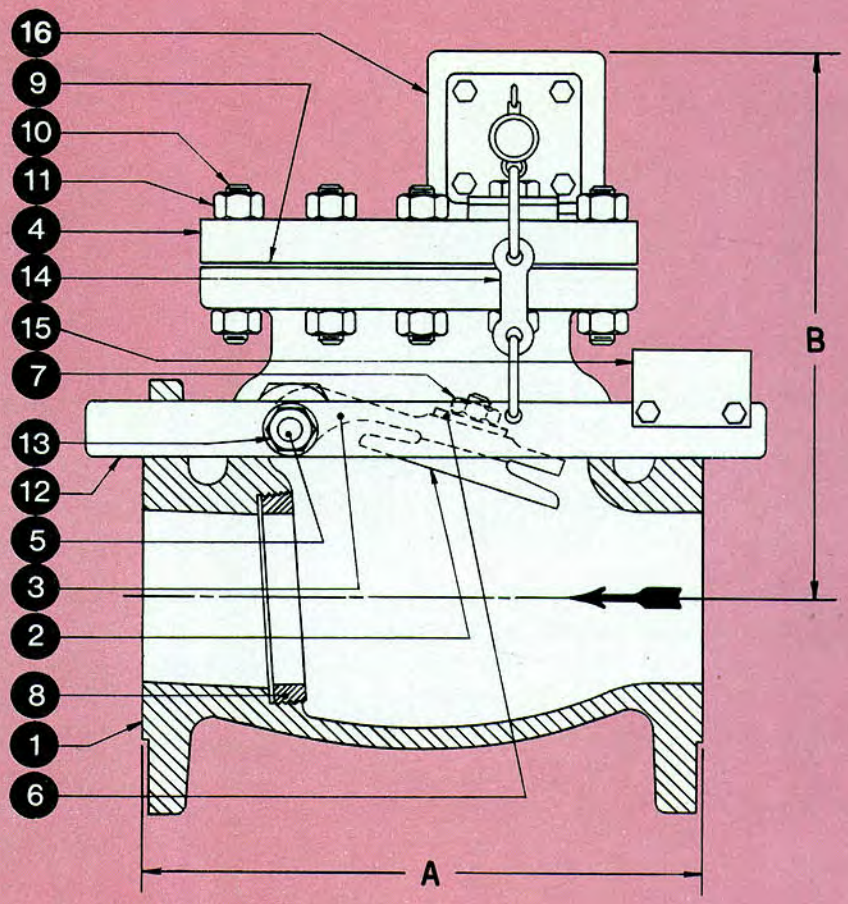

ESOV with Solenoid

Faster Shutoff-local or remote!

The Williams Fig. No. APL-1 or APSL-1 is designed to provide remote shut-off for the flow of fluids or gasses with the use of a *solenoid*. The valve is constructed with an external lever and features a fire-sensitive fusible link. The fusible link then connects to a stainless steel spring-loaded plunger whose movement is controlled by the explosion-proof (Nema-7) Solenoid. The valve is provided with either a spring or weight-assisted handle to assure closure. Solenoids are available *constantly* energized (de-energized to close) or normally de-energized (energized to close). They are also available in various AC voltages as required, and can be mounted to respond to such triggering devices as relays, fire-detectors, probes, and various sensors.

Product Features

A. All solenoids are explosion proof and UL approved

B. Local and remote actuation

C. Once closed valve can be reset manually as a fail-safe feature

D. Unobstructive flow when valve is open

E. Economical

F. Can be mounted in horizontal or vertical service

G. Factory tested

H. Back pressure assures a tight seal between the disc & seat

I. Fire-Safe Fusible link

Ordering Information

1. Size, pressure rating, body & trim material
2. Fusible link temp. desired
3. Weight (Fig. APL-1)
4. Spring (Fig. APSL-1)
5. Line pressure
6. Fluid to be controlled
7. Electrical characteristics of solenoid
8. Horizontal or vertical installation
9. Additional accessories desired
10. Environmental conditions

Size	A	Flange Dia.	Bolt Circle	Raised Face Dia.	No. & Size of Holes	Flange Thick	B
2"	8	6	4-3/4	3-5/8	4-3/4	3/4	9-3/4
2-1/2"	8-1/2	7	5-1/2	4-1/8	4-3/4	7/8	9-3/4
3"	9-1/2	7-1/2	6	5	4-3/4	15/16	10
4"	11-1/2	9	7-1/2	6-3/16	8-3/4	15/16	11-3/8
5"	13	10	8-1/2	7-5/16	8-7/8	15/16	11-3/8
6"	14	11	9-1/2	8-1/2	8-7/8	1	13-1/4
8"	19-1/2	13-1/2	11-3/4	10-5/8	8-7/8	1-1/8	15-1/4
10"	24-1/2	16	14-1/4	12-3/4	12-1	1-3/16	17-1/4
12"	27-1/2	19	17	15	12-1	1-1/4	18-3/4
14"	31	21	18-3/4	16-1/4	12-1-1/8	1-3/8	19-1/2
16"	34	23-1/2	21-1/4	18-1/2	16-1-1/8	1-7/16	21

PLEASE CONSULT WITH FACTORY FOR VALVES LARGER THAN 16" NPS.

WILLIAM E. WILLIAMS VALVE CORPORATION
38-52 Review Avenue
Long Island City, NY 11101
718-392-1660
1-800-221-1115
Telex: 125456(WILLMSVALV)
FAX: 718-729-5106

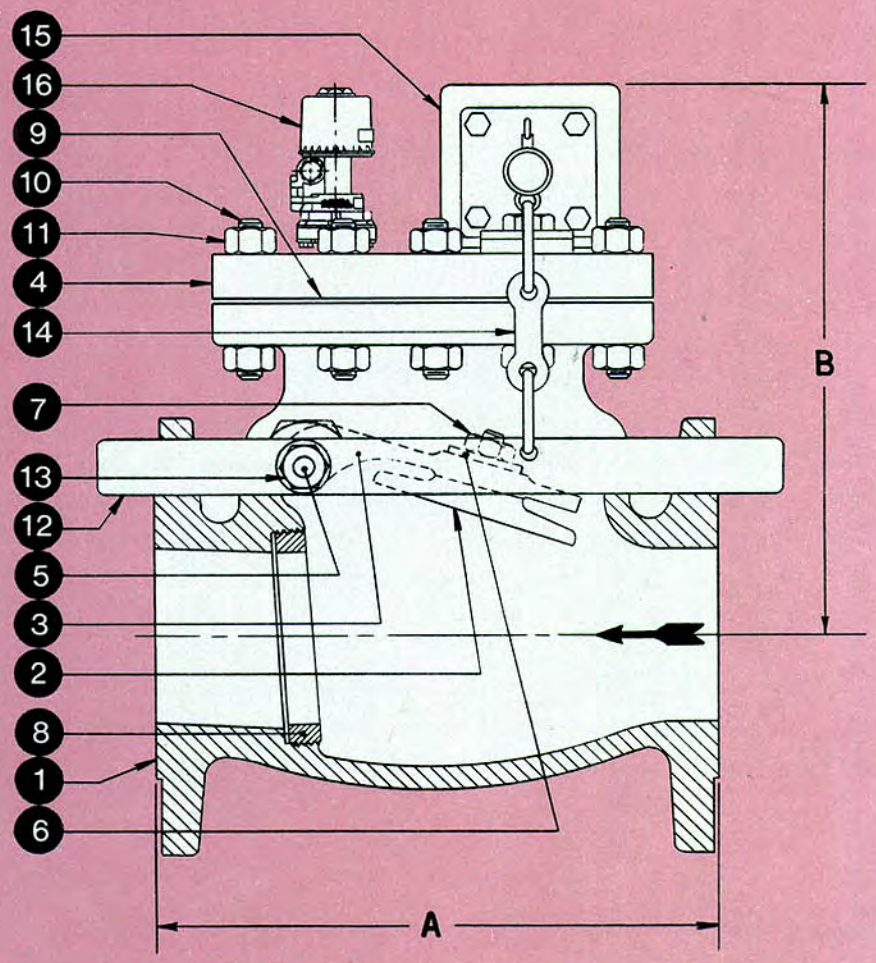

NO.	PART	MATERIAL
1	Body	ASTM A 216 GR WCB
2	Disc	ASTM A 182 GR F6
3	Disc Arm-Hanger	ASTM A 216 GR WCB
4	Cover	ASTM A 216 GR WCB
5	Hinge Pin	ASTM A 182 GR F6
6	Disc Washer	ASTM A 182 GR F6
7	Disc Nut	ASTM A 194 GR 2H
8	Seat Ring	ASTM A 182 GR F6
9	Cover Gasket	Soft Iron
10	Cover Studs	ASTM A 193 GR B7
11	Cover Nuts	ASTM A 194 GR 2H
12	Lever	Cold Rolled Steel
13	Lever Nut	ASTM A 194 GR 2H
14	Fusible Link	Lead
15	Solenoid	Commercial
16	Pressure Switch	Asco Co.
17	Packer Nut—Not Shown	Carbon Steel
18	Packer Box-Not Shown	Carbon Steel
19	Side Plug—Not Shown	Carbon Steel

High Pressure Switch ESOV

Maximum High-Pressure Protection

The Williams Fig. No. APL-1 H P with a pressure switch and solenoid mounted is designed to actuate valve closure when dangerously high pressure is in the line. The switch trips when a predetermined pressure level is sensed. This action causes the solenoid to actuate and close the valve. The fusible link provides added fail-safe protection in case of fire.

Product Features

A. All solenoids are explosion proof and UL approved

B. Local and remote actuation

C. Once closed valve can be reset manually as a fail-safe feature

D. Unobstructive flow when valve is open

E. Economical

F. Can be mounted in horizontal or vertical service

G. Factory tested

H. Back pressure assures a tight seal between the disc & seat

I. Fire-Safe Fusible link

Ordering Information

1. Size, pressure rating, body & trim material
2. Fusible link temp. desired
3. Weight (Fig. APL-1 HP)
4. Spring (Fig. APSL-1 HP)
5. Line pressures
6. Fluid to be controlled
7. Electrical characteristics of solenoid
8. Horizontal or vertical installation
9. Additional accessories desired
10. Environmental conditions
11. Pressure switch characteristics

Size	A	Flange Dia.	Bolt Circle	Raised Face Dia.	No. & Size of Holes	Flange Thick	B
2"	8	6	4-3/4	3-5/8	4-3/4	3/4	9-3/4
2-1/2"	8-1/2	7	5-1/2	4-1/8	4-3/4	7/8	9-3/4
3"	9-1/2	7-1/2	6	5	4-3/4	15/16	10
4"	11-1/2	9	7-1/2	6-3/16	8-3/4	15/16	11-3/8
5"	13	10	8-1/2	7-5/16	8-7/8	15/16	11-3/8
6"	14	11	9-1/2	8-1/2	8-7/8	1	13-1/4
8"	19-1/2	13-1/2	11-3/4	10-5/8	8-7/8	1-1/8	15-1/4
10"	24-1/2	16	14-1/4	12-3/4	12-1	1-3/16	17-1/4
12"	27-1/2	19	17	15	12-1	1-1/4	18-3/4
14"	31	21	18-3/4	16-1/4	12-1-1/8	1-3/8	19-1/2
16"	34	23-1/2	21-1/4	18-1/2	16-1-1/8	1-7/16	21

PLEASE CONSULT WITH FACTORY FOR VALVES LARGER THAN 16" NPS.

WILLIAM E. WILLIAMS VALVE CORPORATION
38-52 Review Avenue
Long Island City, NY 11101
718-392-1660
1-800-221-1115
Telex: 125456(WILLMSVALV)
FAX: 718-729-5106

NO.	PART	MATERIAL
1	Body	ASTM A 216 GR WCB
2	Disc	ASTM A 182 GR F6
3	Disc Arm-Hanger	ASTM A 216 GR WCB
4	Cover	ASTM A 216 GR WCB
5	Hinge Pin	ASTM A 182 GR F6
6	Disc Washer	ASTM A 182 GR F6
7	Disc Nut	ASTM A 194 GR 2H
8	Seat Ring	ASTM A 182 GR F6
9	Cover Gasket	Soft Iron
10	Cover Studs	ASTM A 193 GR B7
11	Cover Nuts	ASTM A 194 GR 2H
12	Lever	Cold Rolled Steel
13	Lever Nut	ASTM A 194 GR 2H
14	Fusible Link	Lead
15	Weight	Cast Iron
16	Solenoid	Commercial
17	Packer Nut—Not Shown	Carbon Steel
18	Packer Box-Not Shown	Carbon Steel
19	Side Plug—Not Shown	Carbon Steel
20	Temperature Sensor	Commercial

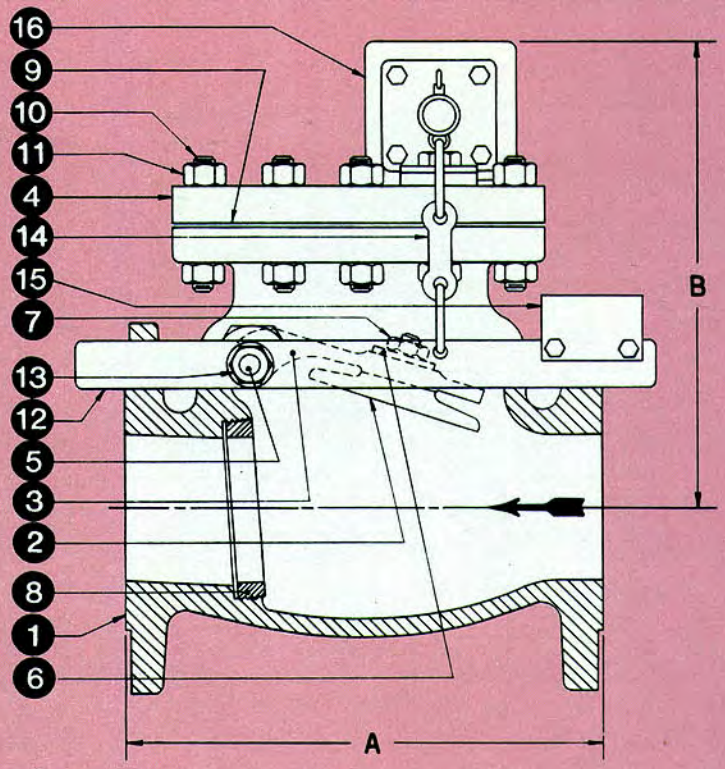

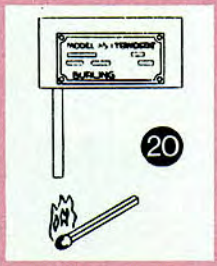

Temperature Sensitive ESOV

Added Safety in High Temperature Situations

Williams Fig. No. APL-1 TS with a solenoid and fusible link can be modified to include a temperature sensitive accessory to actuate valve closure during dangerously high temperature situations. The valve is wired in series or at critical remote locations. The temperature sensitive instrument generates a signal when temperatures reach a predetermined level. This signal actuates the solenoid and the valve automatically closes. The package can readily be integrated into the main system and used to shut down other controlled equipment.

Product Features

A. Explosion proof temperature sensor in wide range of temperature scales
B. Explosion proof solenoid
C. Low voltage required
D. Local and/or remote location
E. Once closed valve can only be reset manually as fail-safe feature
F. Unobstructed flow when open
G. Economical
H. Can be mounted in horizontal or vertical service
I. Factory tested
J. Back pressure assures a tight seal between disc & seat
K. Fire-Safe fusible link

Ordering Information

1. Size, pressure rating, body & trim material
2. Fusible link temp.
3. Weight (Fig. APL-1 TS)
4. Spring (Fig. APSL-1 TS)
5. Line pressures
6. Fluid to be controlled
7. Horizontal or vertical installation
8. Environmental conditions
9. Electrical characteristics
10. Accessories desired
11. Desired temp. setting

Size	A	Flange Dia.	Bolt Circle	Raised Face Dia.	No. & Size of Holes	Flange Thick	B
2"	8	6	4-3/4	3-5/8	4-3/4	3/4	9-3/4
2-1/2"	8-1/2	7	5-1/2	4-1/8	4-3/4	7/8	9-3/4
3"	9-1/2	7-1/2	6	5	4-3/4	15/16	10
4"	11-1/2	9	7-1/2	6-3/16	8-3/4	15/16	11-3/8
5"	13	10	8-1/2	7-5/16	8-7/8	15/16	11-3/8
6"	14	11	9-1/2	8-1/2	8-7/8	1	13-1/4
8"	19-1/2	13-1/2	11-3/4	10-5/8	8-7/8	1-1/8	15-1/4
10"	24-1/2	16	14-1/4	12-3/4	12-1	1-3/16	17-1/4
12"	27-1/2	19	17	15	12-1	1-1/4	18-3/4
14"	31	21	18-3/4	16-1/4	12-1-1/8	1-3/8	19-1/2
16"	34	23-1/2	21-1/4	18-1/2	16-1-1/8	1-7/16	21

PLEASE CONSULT WITH FACTORY FOR VALVES LARGER THAN 16" NPS.

WILLIAM E. WILLIAMS VALVE CORPORATION
38-52 Review Avenue
Long Island City, NY 11101
718-392-1660
1-800-221-1115
Telex: 125456(WILLMSVALV)
FAX: 718-729-5106

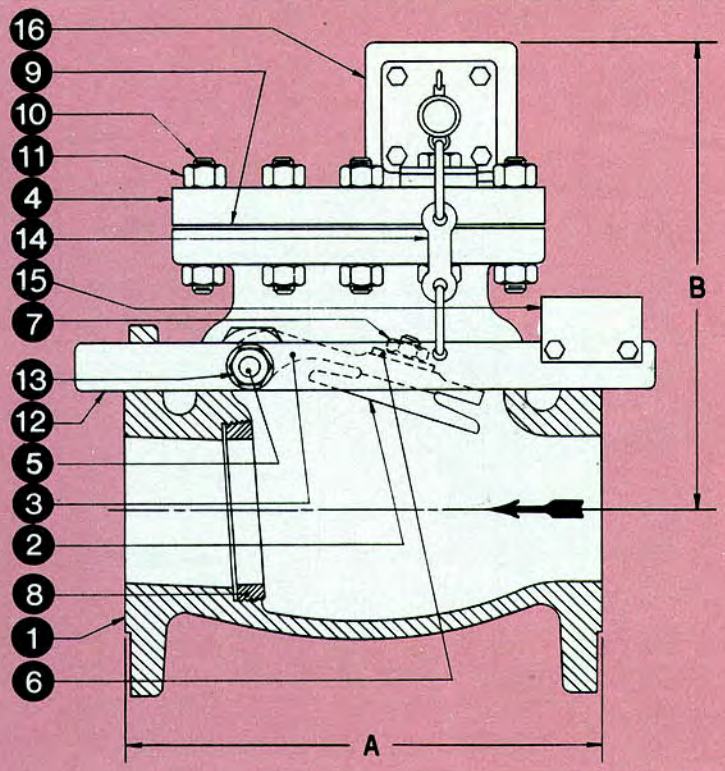

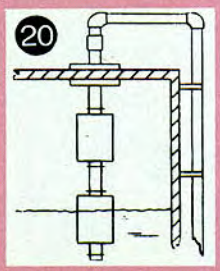

NO.	PART	MATERIAL
1	Body	ASTM A 216 GR WCB
2	Disc	ASTM A 182 GR F6
3	Disc Arm-Hanger	ASTM A 216 GR WCB
4	Cover	ASTM A 216 GR WCB
5	Hinge Pin	ASTM A 182 GR F6
6	Disc Washer	ASTM A 182 GR F6
7	Disc Nut	ASTM A 194 GR 2H
8	Seat Ring	ASTM A 182 GR F6
9	Cover Gasket	Soft Iron
10	Cover Studs	ASTM A 193 GR B7
11	Cover Nuts	ASTM A 194 GR 2H
12	Lever	Cold Rolled Steel
13	Lever Nut	ASTM A 194 GR 2H
14	Fusible Link	Lead
15	Weight	Cast Iron
16	Solenoid	Commercial
17	Packer Nut—Not Shown	Carbon Steel
18	Packer Box-Not Shown	Carbon Steel
19	Side Plug—Not Shown	Carbon Steel
20	Liquid-Level Station*	Commercial

*Existing High Level Switches may be used

High Level ESOV

No more storage tank overflow!

The Williams Fig. No. APL-1 HL solenoid equipped with a liquid level indicating switch controls liquid levels in storage tanks and other types of reservoirs. The valve is actuated by either a multi-station or single station float switch. The float mechanism signals the solenoid to close the valve when the level limit in the tank is reached. In addition, The fusible link feature allows closure in case of fire. This method is more efficient and effective than similar systems. Additional system accessories available include an alarm and/or limit switch at a remote location.

Product Features

A. All solenoids are explosion proof and UL approved

B. Local and remote actuation

C. Once closed valve can be reset manually as a fail-safe feature

D. Unobstructive flow when valve is open

E. Economical

F. Can be mounted in horizontal or vertical service

G. Factory tested

H. Back pressure assures a tight seal between the disc & seat

I. Closes in: Current failure, fire or high levels

J. Fire-Safe fusible link

Ordering Information

1. Size, pressure rating, body & trim material
2. Fusible link temp. desired
3. Weight (Fig. APL-1 HL)
4. Spring (Fig. APSL-1 HL)
5. Line pressure
6. Fluid to be controlled
7. Electrical characteristics of solenoid
8. Horizontal or vertical installation
9. Additional accessories desired
10. Environmental conditions
11. Placement on intake and/or out-take lines

Size	A	Flange Dia.	Bolt Circle	Raised Face Dia.	No. & Size of Holes	Flange Thick	B
2"	8	6	4-3/4	3-5/8	4-3/4	3/4	9-3/4
2-1/2"	8-1/2	7	5-1/2	4-1/8	4-3/4	7/8	9-3/4
3"	9-1/2	7-1/2	6	5	4-3/4	15/16	10
4"	11-1/2	9	7-1/2	6-3/16	8-3/4	15/16	11-3/8
5"	13	10	8-1/2	7-5/16	8-7/8	15/16	11-3/8
6"	14	11	9-1/2	8-1/2	8-7/8	1	13-1/4
8"	19-1/2	13-1/2	11-3/4	10-5/8	8-7/8	1-1/8	15-1/4
10"	24-1/2	16	14-1/4	12-3/4	12-1	1-3/16	17-1/4
12"	27-1/2	19	17	15	12-1	1-1/4	18-3/4
14"	31	21	18-3/4	16-1/4	12-1-1/8	1-3/8	19-1/2
16"	34	23-1/2	21-1/4	18-1/2	16-1-1/8	1-7/16	21

PLEASE CONSULT WITH FACTORY FOR VALVES LARGER THAN 16" NPS.

WILLIAM E. WILLIAMS VALVE CORPORATION
38-52 Review Avenue
Long Island City, NY 11101
718-392-1660
1-800-221-1115
Telex: 125456(WILLMSVALV)
FAX: 718-729-5106

NO.	PART	MATERIAL
1	Body	ASTM A 216 GR WCB
2	Disc	ASTM A 182 GR F6
3	Disc Arm-Hanger	ASTM A 216 GR WCB
4	Cover	ASTM A 216 GR WCB
5	Packer Nut	Carbon Steel
6	Disc Washer	ASTM A 182 GR F6
7	Disc Nut	ASTM A 194 GR 2H
8	Seat Ring	ASTM A 182 GR F6
9	Diaphragm Assembly	Commercial
10	Cover Studs	ASTM A 193 GR B7
11	Cover Nuts	ASTM A 194 GR 2H
12	Cover Gasket	Soft Iron
13	Hinge Pin	ASTM A 182 GR F6
14	Resetting Lever	Carbon Steel
15	Side Plug—Not Shown	Carbon Steel
16	Packer Box—Not Shown	Carbon Steel

NOTE: PACKER NUT (PART 5) SERVES AS A LOCKSHIELD. RESETTING LEVER (PART 14) USED TO RESET VALVE.

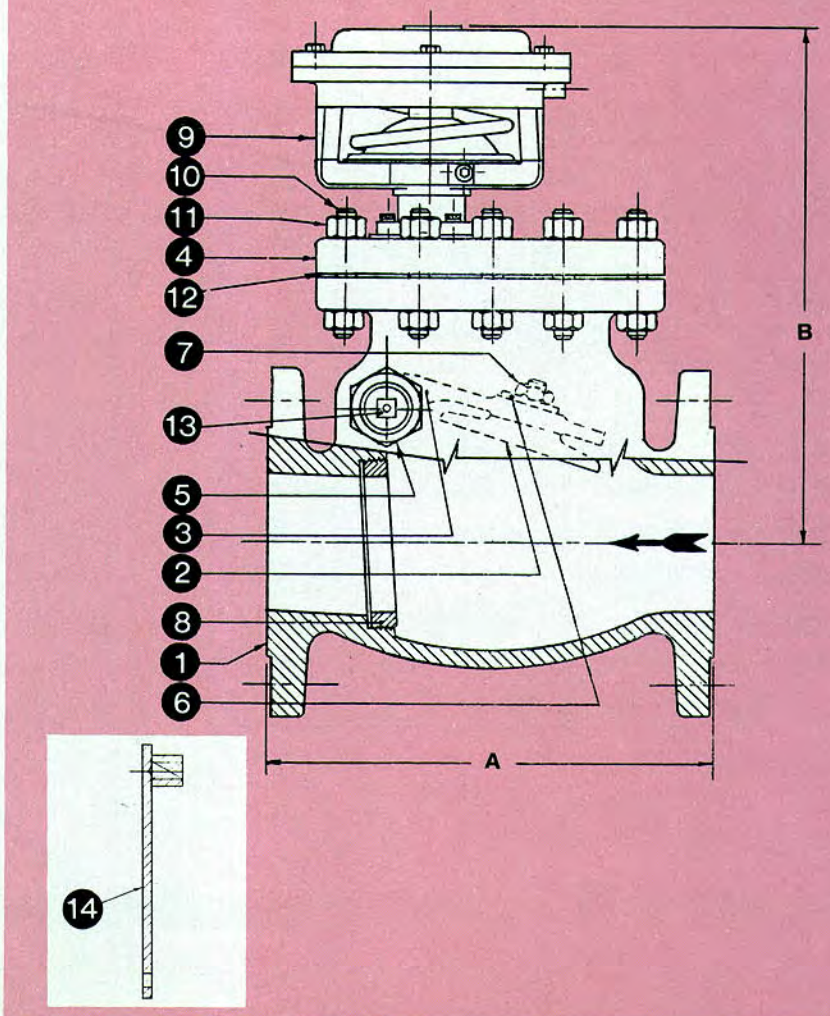

Gas Over Pressure Shut-Off Valve

Protection from Failure of Pressure Reducing or Regulating Valves

The Williams Fig. No. GOSV-1 is designed to operate in medium to low pressure gas distribution systems. It is specifically engineered to close should an overpressure condition result from the failure of a pressure regulator. Normally installed upstream of the regulator, with a sensing line downstream; excess pressure against the spring loaded diaphragm causes the valve to shut. After closure the valve must be manually reset after normal line pressure has been restored.

Product Features

A. Once closed valve can only be reset manually as fail-safe feature

B. Unobstructive flow when open

C. Economical and simple in design and construction

D. Can be moved in horizontal or vertical service

E. Factory tested

F. Back pressure assures a tight seal between disc & seat

G. May be installed either upstream or downstream of the regulator or pressure control point.

Ordering Information

1. Size, pressure rating, body & trim material
2. Line pressure
3. Horizontal or Vertical installation
4. Environmental conditions
5. Accessories desired
6. Shut-off pressure
7. Service intended

Size	A	Flange Dia.	Bolt Circle	Raised Face Dia.	No. & Size of Holes	Flange Thick	B
2"	8	6	4-3/4	3-5/8	4-3/4	3/4	12
2-1/2"	8-1/2	7	5-1/2	4-1/8	4-3/4	7/8	12
3"	9-1/2	7-1/2	6	5	4-3/4	15/16	12-1/4
4"	11-1/2	9	7-1/2	6-3/16	8-3/4	15/16	14
5"	13	10	8-1/2	7-5/16	8-7/8	15/16	14
6"	14	11	9-1/2	8-1/2	8-7/8	1	15-1/2
8"	19-1/2	13-1/2	11-3/4	10-5/8	8-7/8	1-1/8	18

PLEASE CONSULT WITH FACTORY FOR VALVES LARGER THAN 8" NPS.

WILLIAM E. WILLIAMS VALVE CORPORATION
38-52 Review Avenue
Long Island City, NY 11101
718-392-1660
1-800-221-1115
Telex: 125456(WILLMSVALV)
FAX: 718-729-5106

Major Components or Accessories Available

Many more reasons to choose
William E. Williams Emergency Shut Off Valves:

1. Explosion proof solenoid in D.C. or A.C.
2. Pressure sensitive switch with predetermined safety level.
3. Air actuated cylinder.
4. Limit switches:
   a) Proximity—intrinsically safe.
   b) Plunger-type limit switch–Environmentally safe.
   c) Explosion proof, heavy-duty switch.
5. Seismic switches (must be used in conjunction with solenoid).
6. High level or multi station level switches.
7. Thermal temperature sensing devices.
8. Teflon inserts in seats.
9. Fusible links with various temperature ratings.
10. Toggle switches, push buttons, or key locks to ease reassembling.
11. Spring or weight to assure closure.
12. By-passes.
13. Pressure switch.
14. Available up to A.N.S.I. 600.

How To Order

Use the following information guide.

In order to give you what you want please tell us exactly what your problem is and how you would like to have it solved.

Figure No. _____
Size of pipe _____
Pressure involved _____
Weight or spring _____

Environmental conditions _____
Fluid to be controlled _____
Horizontal or vertical _____
Valve construction (i.e. body material) ____
Trim _____
Soft seat (Teflon) _____

TYPE OF ACTUATOR:

☐ ELECTRIC:
a) to close valve ☐
b) current characteristics
Volts _____
Cycle _____
Phase _____

☐ AIR
a) to close valve ☐
b) Fail safe close-Loss of air
c) air pressure available ___

☐ FUSIBLE LINK:
Melting Temperature: _____

☐ MANUAL RELEASE
Yes ☐ No ☐
With cable: Yes ☐ No ☐
Distance away _____ feet

WILLIAM E. WILLIAMS EMERGENCY SHUT-OFF VALVES CUSTOM BUILT TO MEET YOUR SPECIFICATIONS

Because of a policy of continuous product improvement, William E. Williams Valve Corporation reserves the right to change designs, materials or specifications without notice.

WILLIAM E.

WILLIAMS

VALVE CORPORATION

38-52 Review Avenue
Long Island City, NY 11101
718-392-1660
1-800-221-1115
FAX: 718-729-5106
E-mail: wew@williamsvalve.com

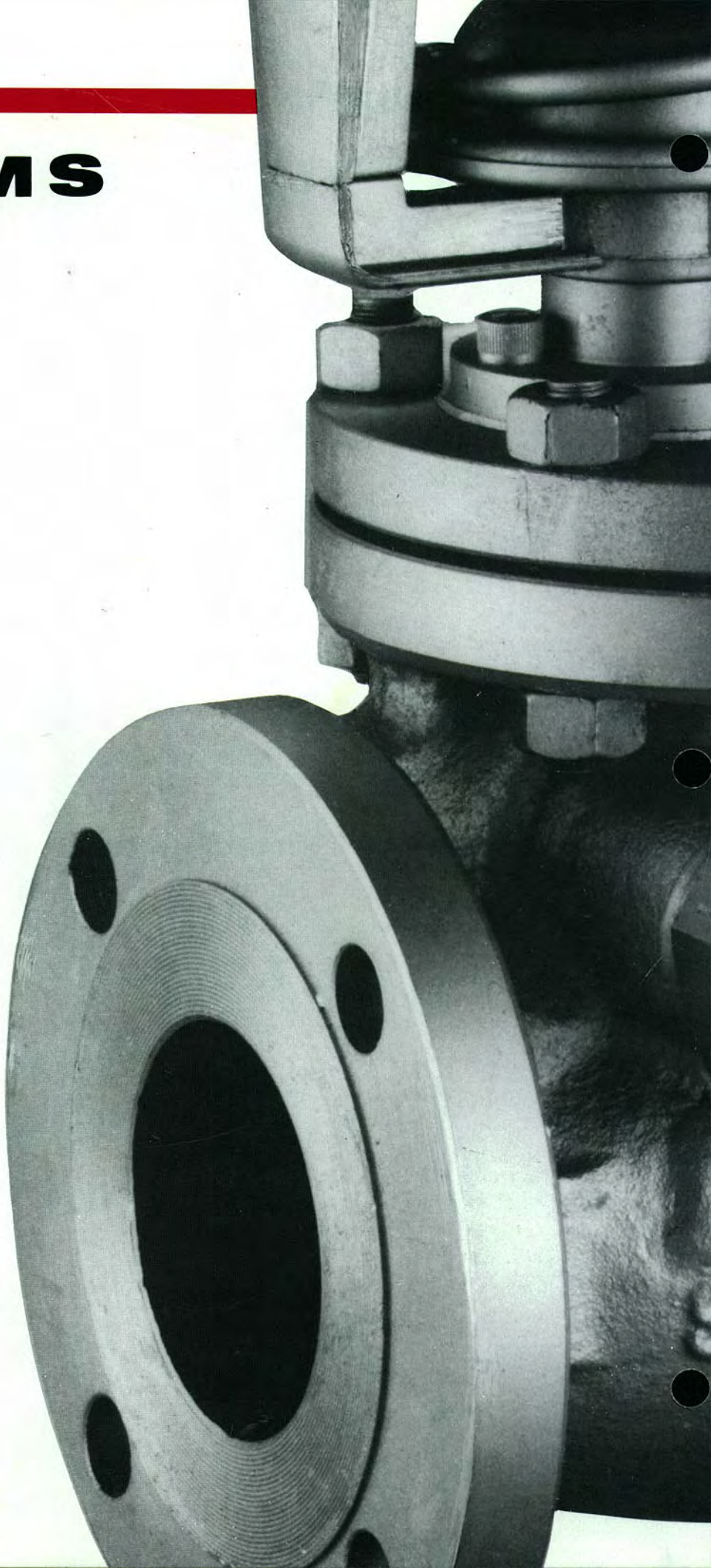

WEW/ESOV 2-99