The Jay R. Smith Mfg. Co.®

Grease+Gard® Retrofit Skimmer and Grease Recovery Device

8165 Grease+Gard® Stainless Steel Grease Recovery Device

8980 Inline Solids Interceptor

SMITH® JAY R. SMITH MFG. CO.®
CUSTOMER DRIVEN

Common Questions

What does Grease+Gard® Retrofit Skimmer and/or Grease Recovery Device (GRD) do that a traditional grease interceptor doesn't?

Traditional grease interceptors must be manually cleaned by a professional with a vacuum truck (large interceptors), or by an employee by hand (small interceptors).

The Grease+Gard® Retrofit Skimmer (installed on an existing grease interceptor) or a Grease+Gard® GRD will automatically remove fats, oils and grease from the interceptor at a pre-determined time. These devices require the grease collection container be emptied as needed.

How does Grease+Gard® technology work?

Free-floating fats, oils and grease are trapped in the grease interceptor. The Grease+Gard® device automatically skims the fats, oils and grease (commonly referred to as F.O.G.) out of the main interceptor chamber and into a collection container. Essentially, the intercepted grease is emptied much like having a professional clean your interceptor. Grease is removed from the interceptor and therefore unable to cause a back-up or overflow into drainage pipes.

How do I dispose of grease collected by a Grease+Gard® device?

Collected grease and oils are emptied into the grease-rendering barrel provided by your local rendering or disposal company. This is often the same barrel where you dump your deep-fryer grease. Rendering or disposal companies pick-up on a schedule and empty this container.

NOTE: Before emptying grease into a landfill or garbage bin, please contact your local authority. Many municipalities have outlawed this practice.

What happens to food and other solid materials that may go down the sink?

Food scraps and other solid materials that may go down the sink drain are a hindrance to all forms of grease collection systems. Installing a solids interceptor between the sink and the grease interceptor will allow you to capture such scraps before they can cause havoc with the interceptor. Inline solids interceptors are easy to empty into a refuse container. Keeping solid waste scraps out of the interceptor adds the extra benefit of reducing odors and reducing the interceptor cleaning. Most odors are the result of rotting solids, not grease.

What kind of maintenance is required for Grease+Gard® system?

Maintenance is a simple procedure and only takes a few minutes per week. Clean the wiper blades and grease trough once every week. Food scraps captured in the solids interceptor basket should be emptied daily. The grease collection container provided with each Grease+Gard® is translucent, empty when full.

What size Grease+Gard® Retrofit Skimmer and/or Grease Recovery Device (GRD) do I need?

Sizing depends on two factors: the number of fixtures in your kitchen and the size of those fixtures in your kitchen. Contact us for a simple review and recommendation.

How long does it take to install a Grease+Gard® Retrofit Skimmer?

The average installation time will vary. However, one can normally expect less than two hours from start to finish.

I have an outside, in-ground, grease interceptor; what can Grease+Gard® possibly do for me?

By using the Grease+Gard® Retrofit Skimmer (installed on an existng grease interceptor) or by installing a Grease+Gard® Grease Recovery Device you are able to remove fats, oils, grease and solids before they get out of the kitchen area and into the in-ground interceptor. A Grease+Gard® system will protect the pipes between the kitchen and the outside interceptor. This will save you the expense of jetting the lines and because almost no grease is going to the in-ground interceptor, you will not have to pump out as often - again saving you money.

Jay R. Smith Mfg. Co. Copyright © 2007 All Rights Reserved

Grease+Gard® Retrofit Skimmer and Grease Recovery Device

"The Solution: Stop grease before it plugs the lines and reaches the environment."

The Grease+Gard® Retrofit Skimmer and Grease Recovery Device are designed to handle the problem of preventing fats, oils, and grease (FOG) from plugging pipes or interfering with treatment of municipal wastewater. The Grease+Gard® system can remove up to 98% of free floating FOG discharge commonly found at food service facilities and in commercial kitchens.

The Grease+Gard® system was engineered with the commercial plumber and food facility owner in mind. It is easy to install and can efficiently and economically accommodate most kitchen, food processing plant or commercial industrial application operating on a continuous basis.

The Grease+Gard® system is the ultimate alternative to a traditional grease interceptor. With a traditional grease interceptor, daily or weekly maintenance may be required. Failing to perform the regular maintenance can cause the piping to become clogged and the interceptor to overflow. This costly mishap requires clean-up of the kitchen areas and the expense of jetting the plumbing lines and pumping the interceptor. Clogs in piping coming from the food service area can also cause the sanitary sewer to overflow. The discharge of sewage from the sanitary sewer may reach free flowing waterways eventually draining into and polluting creeks, rivers, lakes, oceans and municipal reservoirs, all of which increase our health risks and can wreak havoc on the environment.

Skimmer

The Grease+Gard® Retrofit Skimmer and Grease Recovery Device use patent pending technology that automatically removes FOG from the interceptor before it becomes a problem. The main principles of the system are easily understood. The Grease+Gard® system has a belt and heater assembly that is controlled by a 24-hour timer. Upon a given schedule the heater warms up the water in the interceptor and the agitator propeller helps to liquefy the FOG to be extracted. The belt assembly picks up the FOG that is skimmed into a trough. From there it flows into a storage reservoir attached to the side of the Grease+Gard® Skimmer. The FOG reservoir is then emptied as needed.

"The Grease+Gard® Retrofit Skimmer is the only patent pending retrofit automatic grease recovery system on the market today. This retrofit device can be installed on most grease interceptors with no plumbing changes, saving thousands by not having to replace the grease interceptor."

With a Grease+Gard® system, the piping system inside the building is protected from clogging and the interceptor is maintained on a regularly scheduled basis.

The Grease+Gard® Retrofit Skimmer and Grease Recovery Device can reduce the risk of:

Receiving a fine from a government agency because of a back-up problem,

Surcharges by the municipality to process FOG, and frequent pump out schedules.

Our goal at Jay R. Smith Mfg. Co.® is to provide a solution and the equipment to minimize your initial cost and investment into FOG management, while maximizing the benefits you will receive from a technology that achieves efficient and practical method for grease removal. The Grease+Gard® Retrofit Skimmer and Grease Recovery Device are the solutions you have been looking for in the kitchen.

Jay R. Smith Mfg. Co. Copyright © 2007 All Rights Reserved

Grease+Gard® Grease Recovery Device (GRD)

- The Grease+Gard® Grease Recovery Device (GRD) is available in the most common sizes. The 8165 and 8175 GRDs are available in 20, 25, 35 and 50 g.p.m. The 8166 and 8176, Low Type GRDs are available in 20, 35, and 50 g.p.m.

- The Grease+Gard® Retro-Fit Skimmer can be configured to work with most existing grease interceptor on the market today. It is the only one of its kind available.

- Grease+Gard® GRD interceptors are available in Type 304, 16 gauge stainless steel and/or Duco Coated mild steel (specify -A505) to meet your needs.

- The Grease+Gard® Retrofit Skimmer uses a belt type skimmer technology whereas the other GRD's use a disc type wheel. The disc type is limited to above grade installations. Grease+Gard® systems can be installed in-floor or above-the-floor.

- The Grease+Gard® device is the only GRD on the market that has the patent pending Agitator technology. The Agitator is attached to the lower pulley on the Grease+Gard® unit. When the device operates it turns the Agitator. The Agitator maintains circulation in the interceptor thus it eliminates the need of having to lift the grease interceptor lid and stir the contents so that grease is easily skimmed and removed. Stirring of the interceptor could be needed as much as every other day with other GRD's.

- The Grease+Gard® Skimmer and GRD are completely sealed devices designed to keep odors out of the facility.

- The Grease+Gard® device is easy to access and maintain. There are two latches to remove the Grease+Gard® device from the interceptor so it can be taken outside of the facility to be serviced.

- The Grease+Gard® belt can be serviced and changed in a couple of minutes; no tools required.

How It Works

Grease+Gard® uses a heater and belt technology to skim the grease out of the interceptor.

Grease Reservoir

Grease+Gard's® trough has one of the industries most aggressive slopes. This helps on the gravity feed to the grease container and also reduces the cleaning cycle of the grease trough.

Skimmer Belt and Blades

The skimmer belt goes through the skimmer blades and wipes the grease off of the belt and gravity feeds the grease down the trough into the grease container.

Grease is removed out of the unit because of its viscosity allows it to stick to the belt.

Grease+Gard® Skimmer*

Grease+Gard® is a completely sealed device to prevent unpleasant odors.

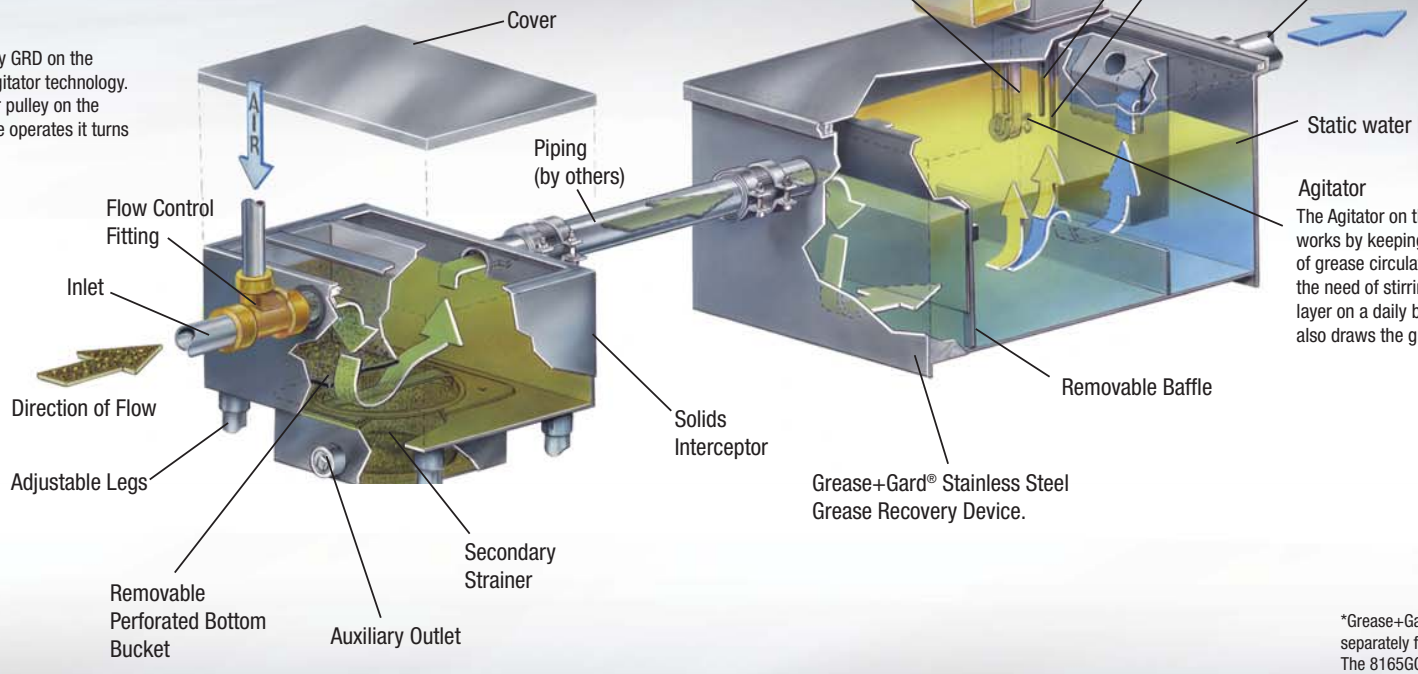

Agitator

The Agitator on the lower pulley works by keeping the upper layer of grease circulating, eliminating the need of stirring the grease layer on a daily basis. The Agitator also draws the grease to the belt.

*Grease+Gard® Skimmers are available separately for retro-fit installations. The 8165GG, 8166GG, 8175GG and 8176GG require a 6" square opening in the interceptor lid for installation.

Jay R. Smith Mfg. Co. Copyright © 2007 All Rights Reserved

Product Catalog

Grease+Gard® Retrofit Skimmers

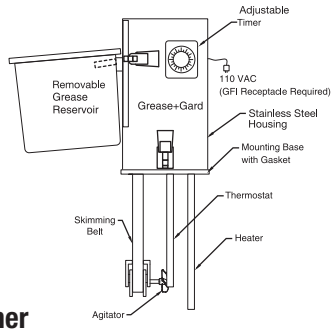

8165GG Retrofit Skimmer

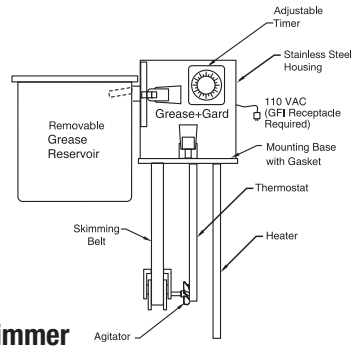

8175GG Retrofit Low Profile Skimmer

The 8165GG and 8175GG Skimmers work on most any type of grease interceptor in the Smith Yellow Pages catalog or other grease interceptors on the market today. For low type retrofit grease interceptor installation use the 8166GG (standard height) or 8176GG (low profile skimmer) with shallower belt, thermostat, and heater.

Grease+Gard® Stainless Steel Grease Recovery Devices

Fig. #8165

Fig. #8166

Fig. #8175

Fig. #8176

8165 Stainless Steel Grease Recovery Device – 20, 25, 35 and 50 GPM
8166 Low Type Stainless Steel Grease Recovery Device – 20, 35 and 50 GPM
8175 Stainless Steel Grease Recovery Device with Low Profile Skimmer – 20, 25, 35 and 50 GPM
8176 Low Type Stainless Steel Grease Recovery Device with Low Profile Skimmer – 20, 35 and 50 GPM
For Duco Coated Steel, specify –A505

Fig. #8165

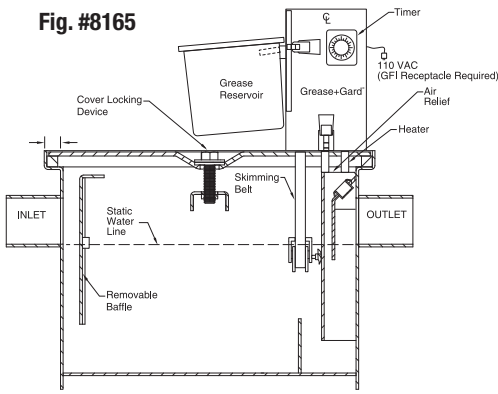

Fig. #8175

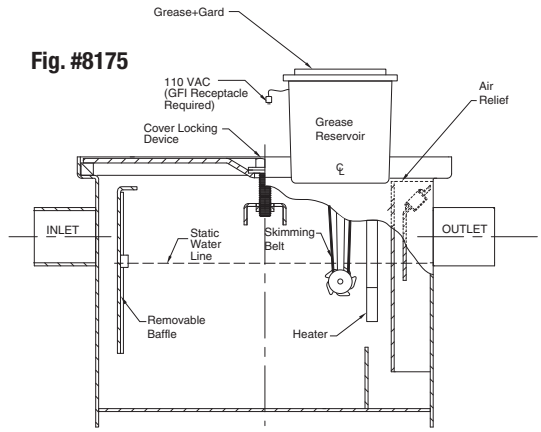

Grease+Gard® Stainless Steel Solids Interceptors

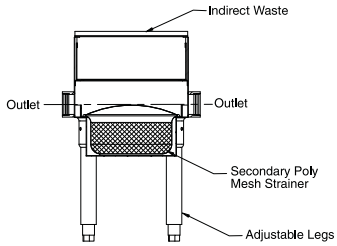

8960 Indirect Solids Interceptor

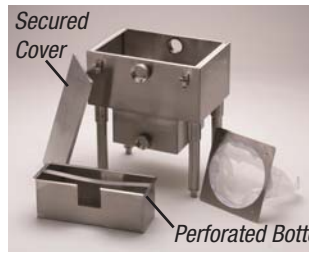

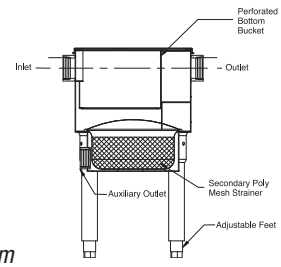

8980 Inline Solids Interceptor

Jay R. Smith Mfg. Co. Copyright © 2007 All Rights Reserved

Grease+Gard® Retrofit Skimmer and Grease Recovery Device

"The Solution: Stop grease before it plugs the lines and reaches the environment."

Installation Options

The Grease+Gard® Retrofit Skimmer can be installed on most existing grease interceptors on the market today.

The Grease+Gard® Grease Recovery Device is installed like a traditional grease interceptor. Several installation options are shown in the following illustration.

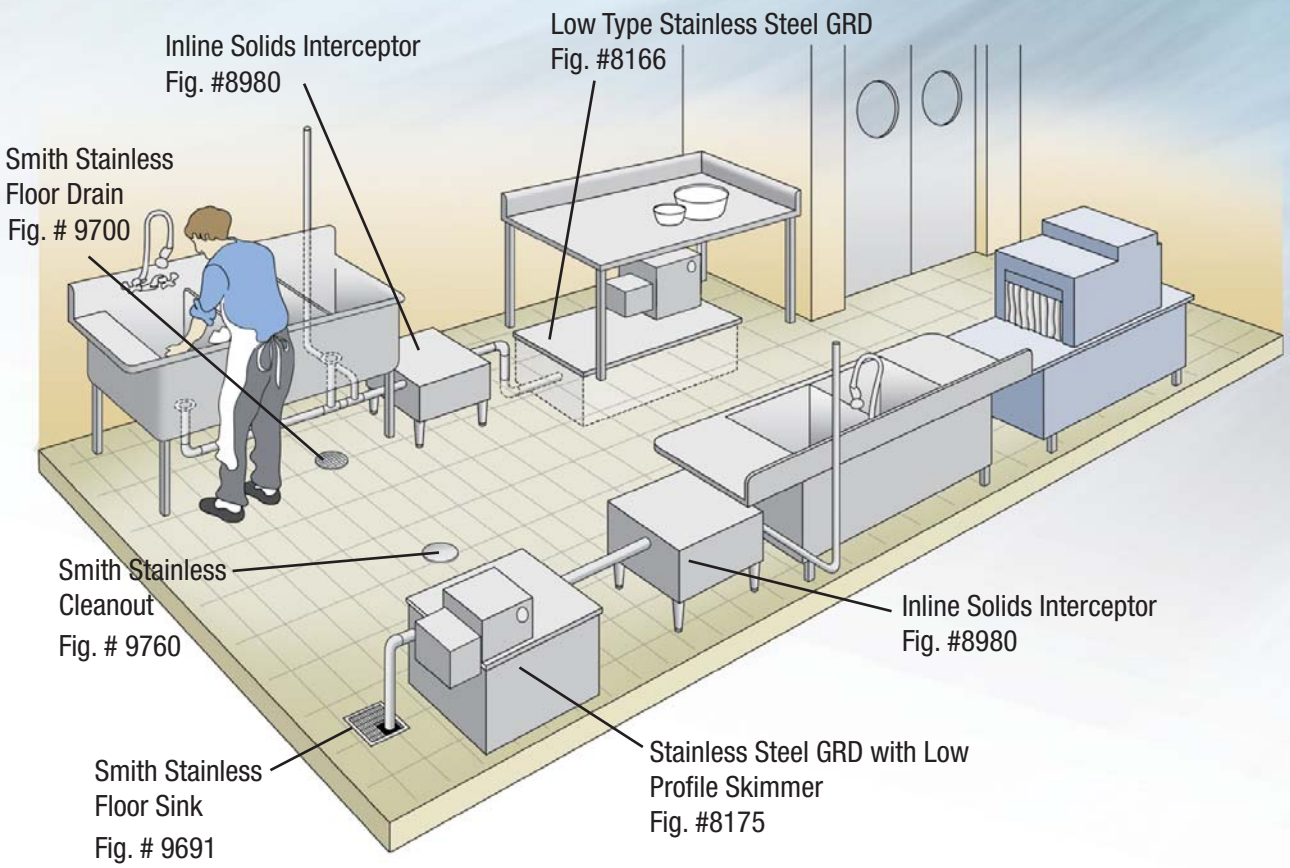

Commercial Kitchen and Food Processing Applications

Restaurants	Casinos	Hospital Cafeterias
Grocery Stores / Convenience Stores	Church Kitchens	Correctional Facilities
Movie Theater Snack Areas	Food Processing Plants	Retirement Homes
Hotel Kitchens	Concession Stands	Resort Restaurants
Sports Arenas	Schools	Airport Eateries
Cruise Lines	Convention Centers	Mall Food Courts

Jay R. Smith Mfg. Co. Copyright © 2007 All Rights Reserved

Grease+Gard® Retrofit Skimmer and Grease Recovery Device

"The Solution: Stop grease before it plugs the lines and reaches the environment."

Case Study/Testimonial

Shari's is a restaurant chain in the Northwest operating 24 hours a day; similar to Denny's.

Shari's had a 20 gallon per minute interceptor installed in-the-floor in their mechanical room. The interceptor was recessed in-the-floor and only connected to their double compartment sink. The pre-rinse was not picked up by an interceptor.

The City of Hillsboro was not happy with Shari's discharge; they had them pump out the grease interceptor twice a week. With the pre-rinse sink not being hooked up to the interceptor this facility was discharging a lot of grease into the sewer system.

Shari's had Grease+Gard® look at their application to see what could be done to bring them in compliance with the city. We were able to take the pre-rinse sink and the double bowl sink and run the two sinks through a solids interceptor, then to the grease interceptor. We were able to take the Grease+Gard®, 8175GG and mount it on top of the grease interceptor.

Now Shari's was able to remove the solids at the source and remove the grease out of the grease interceptor daily. This allowed Shari's to go 2 months without pumping out their interceptor.

Contact your local representative

Specifications

Grease+Gard® Grease Recovery Device
Furnish and install a Jay R. Smith Mfg. Co. Grease+Gard® Grease Removal Device figure numbers 8165, standard or 8166, low type unit. The Grease+Gard® GRD automatically removes the grease at a predetermined schedule. The unit is constructed from type 304 stainless steel and features the Grease+Gard® belt type skimmer with integral heating element, patented Agitator technology, adjustable timer, mounting plate with gasket, complete with gasketed stainless steel cover, external flow control, no-hub connections and grease reservoir container.

Grease+Gard® Retrofit Skimmer
Furnish and install a retrofit Jay R. Smith Mfg. Co. Grease+Gard® Skimmer figure numbers 8165GG, standard or 8175GG, low profile unit on an existing grease interceptor. The skimmer housing is constructed from type 304 stainless steel and features the Grease+Gard® belt type skimmer with integral heating element, patented Agitator technology, adjustable timer, mounting plate with gasket and grease reservoir container.

Grease+Gard® Indirect Solids Interceptor
Furnish and install a Jay R. Smith Mfg. Co. Grease+Gard® Indirect Solids Interceptor figure number 8960. The solids interceptor is constructed of type 304 stainless steel and features adjustable legs, perforated bottom bucket, and secondary poly mesh strainer.

Grease+Gard® Inline Solids Interceptor
Furnish and install a Jay R. Smith Mfg. Co. Grease+Gard® Inline Solids Interceptor figure number 8980. The solids interceptor is constructed of type 304 stainless steel and features adjustable legs, perforated bottom bucket, secondary poly mesh strainer and secure cover.

Grease+Gard®

Retrofit Skimmer

Grease Recovery Device with Solids Interceptor

SMITH® CUSTOMER DRIVEN
JAY R. SMITH MFG. CO.
DIVISION OF SMITH INDUSTRIES, INC.
POST OFFICE BOX 3237
MONTGOMERY, ALABAMA 36109-0237 (USA)
TEL: 334-277-8520 FAX: 334-272-7396 www.jrsmith.com

MEMBER OF:

Patent Pending

SPM1146
06/07

Jay R. Smith Mfg. Co. Copyright © 2007 All Rights Reserved