Jay R. Smith Mfg. Co.®

a better way

Bariatric Toilet, Extra Heavy Duty and Bariatric Closet Support Solutions

Jay R. Smith Mfg. Co.®
A Better Way of Addressing the Special Needs of Bariatric Health Care Design

SMITH® CUSTOMER DRIVEN

JAY R. SMITH MFG. CO.
DIVISION OF SMITH INDUSTRIES, INC.
POST OFFICE BOX 3237
MONTGOMERY, ALABAMA 36109-0237 (USA)
TEL: 334-277-8520 FAX: 334-272-7396 www.jrsmith.com

MEMBER OF:

For additional help selecting a bariatric system, visit our web site at **www.jrsmith.com**

Bariatric Toilet and Closet Support Solutions That Addr

Bariatric and Healthcare Design

Healthcare organizations continue to balance the cost of care with quality staff, patient safety, morale, and accessibility. The design of facilities has a direct impact on all of these performance criteria for care and must apply for all patient types, including the increasingly larger bariatric population. Health-care settings are adapting care practices, procuring special equipment and supplies, renovating, and building new spaces to accommodate morbidly obese people.

Healthcare organizations across the nation are adapting their care practices to address the increasing needs of the bariatric population.

Morbidly obese patients access healthcare systems, just like all other patient types, become part of the healthcare delivery continuum through inpatient, ambulatory, and outpatient settings. Their physical needs and conditions, however, are highly specialized. The design community is facing the request for the creation of “bariatric-friendly” healthcare environments.

Currently more than 59 million Americans (about 31 percent of the population) are obese, of whom an estimated 5 to 10 million suffer from morbid obesity. At the current rate, 39 percent of Americans will be obese by 2009.[1]

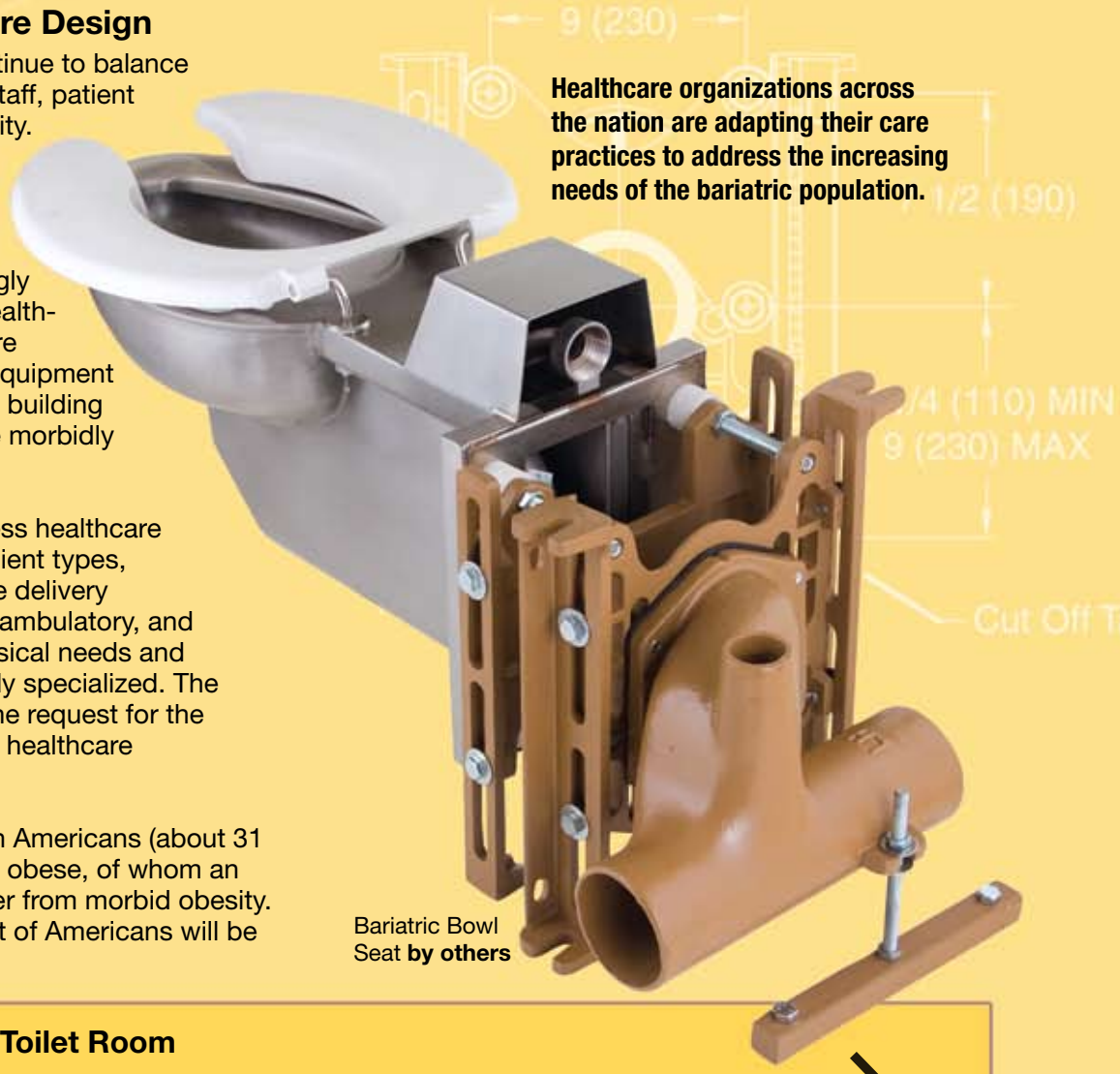

Bariatric Bowl Seat **by others**

Designing a Bariatric Toilet Room

Provide a wall-mounted water closet and support system rated to at least 700 pounds and allow for staff assistance on two sides of patient at water closet. A clearance of 5 feet allows for location of a bariatric water closet if necessary and doesn’t infringe on heights and distances of accessories around the water closet. For care and safety concerns, choose a stainless steel water closet over porcelain, if it meets the rating.

Water Closet Rating: 700 pounds minimum (design drop weight with an impact factor of 1.4 with a patient weight of 500 pounds).

Water Closet Support Rating: 1,000 pounds (static load) per ASME Standard A112.61M.

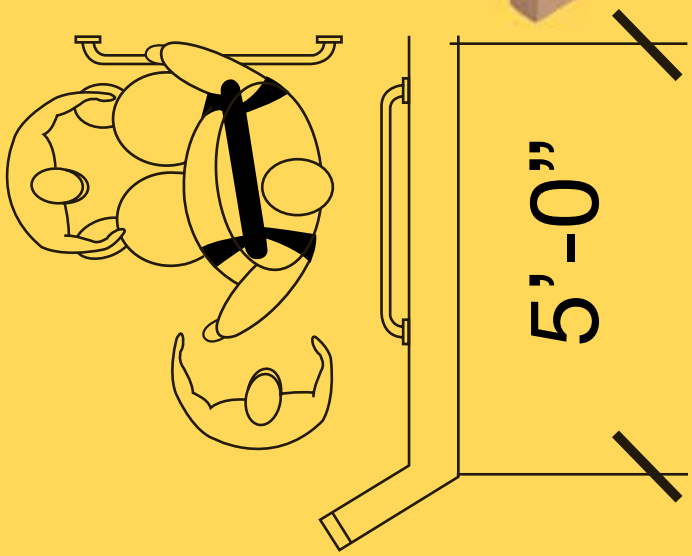

[1] The American Institute of Architects, Bariatric Healthcare Facilities

ress the Special Needs of Bariatric Health Care Design

EXTRA HEAVY DUTY & BARIATRIC ADJUSTABLE FIXTURE SUPPORTS

0210Y-M54-XX –Extra Heavy Duty, 750 LBS

- Provides corresponding performance up to 750 pounds behind the wall.
- Complies with and/or exceeds all requirements of ASME A112.61M up to 750 (static load) pounds.
- Incorporates a newly designed M51 anchor bar and kit to strengthen support to 750 (static load) pounds.
- The use of a wall mounted toilet provides a hygienic environment by keeping the fixture off the floor.
- Designed for new or retro-fit construction and fits standard wall mounted toilet installation using 5/8” studs.

0210Y-M54-XK -Bariatric Duty, 1000 LBS

- Provides corresponding performance up to 1,000 pounds behind the wall.
- Complies with and/or exceeds all requirements of ASME A112.61M up to 1,000 (static load) pounds.
- Incorporates a newly designed M51 anchor bar and kit, and auxiliary support frame to strengthen support to 1,000 (static load) pounds. (Auxiliary support frame is to be positioned directly behind the finished wall).
- The use of a wall mounted toilet provides a hygienic environment by keeping the fixture off the floor.
- Designed for new or retro-fit construction and fits standard wall mounted toilet installation using 5/8” studs.

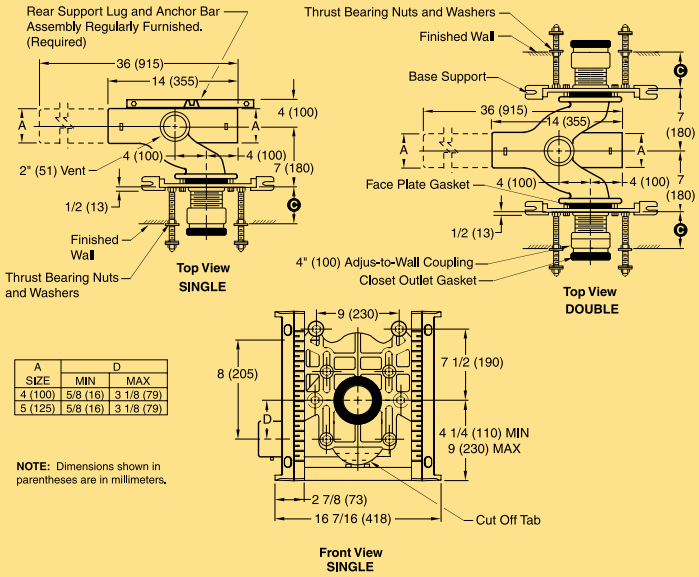

A SIZE	D MIN	D MAX
4 (100)	5/8 (16)	3 1/8 (79)
5 (125)	5/8 (16)	3 1/8 (79)

NOTE: Dimensions shown in parentheses are in millimeters.

Figure Number 0210Y-M54-XX

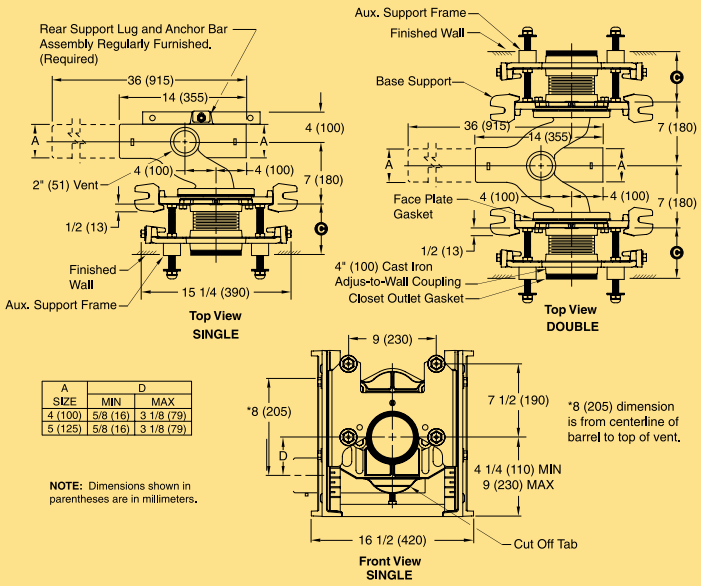

*8 (205) dimension is from centerline of barrel to top of vent.

A SIZE	D MIN	D MAX
4 (100)	5/8 (16)	3 1/8 (79)
5 (125)	5/8 (16)	3 1/8 (79)

NOTE: Dimensions shown in parentheses are in millimeters.

Figure Number 0210Y-M54-XK

BARIATRIC WALL MOUNTED TOILET

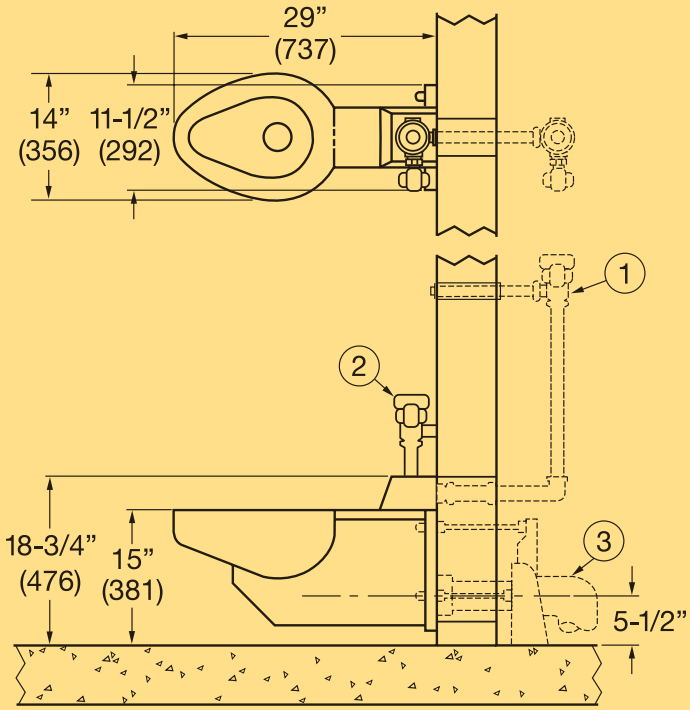

1. Flush Valve—Wall Supply **by others**
2. Flush Valve—Top Supply **by others**
3. Extra Heavy Duty or Bariatric Closet Support

Figure Number 9901

9901 Elongated Bariatric Duty Wall Hung Water Closet Rated Up To 1,000 Pounds

- Use with any Smith Extra Heavy Duty or Bariatric Fixture Support to assure performance and to safe-guard against catastrophic failure.
- Extra Heavy Duty and Bariatric wall hung siphon jet toilet with elongated rim and 1-1/2” NPT back spud (concealed) or top flush valve connection.
- Toilet bowl is fabricated from 14 gauge, type 304 stainless steel and is seamless welded construction for rigidity and sanitary conditions.
- Manufactured to ANSI 112.19.2M requirements and requires a minimum of 25 PSI flow pressure. Toilet uses a water consumption of 1.6 gallons or less per flush.
- Seamless construction.
- Wall flange is structurally reinforced.
- Exterior is polished to a satin finish.
- The inside of the toilet bowl has a matte finish.

Contact Your Representative

GUIDE SPECIFICATIONS: Provide and install Jay R. Smith Mfg. Co. Bariatric Siphon Jet Toilet (specify figure number 9901 and options). Toilet bowl shall be fabricated from 14 gauge, type 304 stainless steel. Construction shall be seamless welded and exposed surfaces shall have a satin finish. Toilet shall be concealed siphon jet type with an elongated bowl, a self-draining flushing rim, and punched for elongate hinged seat. Toilet shall meet ANSI 112.19.2M requirements, using an average water consumption of 1.6 gallons per flush or less. Waste outlet connection is 5-1/2” diameter recessed gasket flange. Fixture shall be furnished with necessary fasteners for proper installation.

SMITH® CUSTOMER DRIVEN

JAY R. SMITH MFG. CO.
DIVISION OF SMITH INDUSTRIES, INC.
POST OFFICE BOX 3237
MONTGOMERY, ALABAMA 36109-0237 (USA)
TEL: 334-277-8520 FAX: 334-272-7396 www.jrsmith.com

MEMBER OF:

For additional help selecting a bariatric system visit our web site at **www.jrsmith.com**

SPM 0376
10/08