Jay R. Smith Mfg. Co.®

FloodGate®

Automatic Backwater Valve

SMITH®

CUSTOMER DRIVEN

Index Page

Flood-Gate® Features and Applications 2

How Flood-Gate® Works 3

Flood-Gate® Operation & Approvals 4

Valve Sizes, Rough-in Dimensions & Options 5

Valve Installation 6

Special Installations 7

Monitoring System Installation & Operation 8

Testing Instructions 9

Specifications 10

Illustration 11

Submittal Back Cover

FLOOD-GATE® FEATURES

Completely Automatic: (both closing and resetting)

The building owner does not have to activate the valve or even be present to ensure protection from sewage backup.

Effective Operation Without Electricity

Fully mechanical - no electricity is required to activate the valve or to reset the gate after operation.

Full Port:

Nothing to obstruct the flow or trap debris.

In-Line Construction:

Can easily be installed in existing buildings.

Positive Seal:

Once closed, it prevents leakage beyond the valve. 99.9% effective in tests with a 45 foot head of water pressure.

Cast Iron Body with Stainless Steel Knife Gate:

Long life and dependability. It is designed to cut through normal debris such as raw sewage and paper material that would clog regular flapper style backwater valves.

No Resetting:

Valve does not require resetting after being activated.

FLOOD-GATE® APPLICATIONS

Homes: Protect your investment from costly insurance claims.

Commercial: Basements, elevator pits, computer and electrical rooms to prevent costly downtime.

Industrial: Protect valuable machinery and equipment.

Institutional: Hospitals and schools to maintain maximum health environment.

Restaurants: Helps protect against bacterial contamination.

Properly installed, the FLOOD-GATE® will provide years of trouble-free automatic service.

HOW THE FLOOD-GATE® WORKS. AUTOMATICALLY:

A sewerage backflow into the building/house will happen if a stoppage or similar problem in the municipal/street sewer, or septic system occurs causing the drainage water level to rise above the top of the building/house drain. It is under these conditions that the Flood-Gate works.

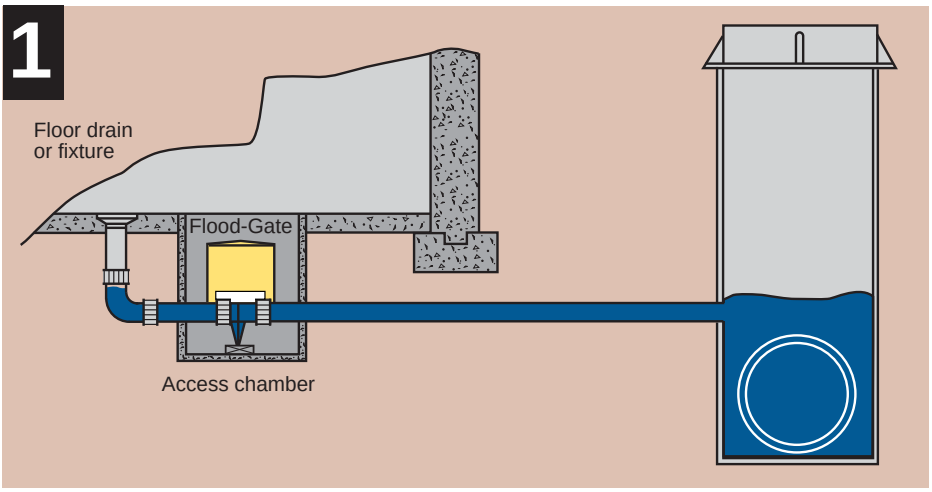

As the sewerage backflow occurs the air trapped in the expansion chamber is compressed by sewerage backup. The pressure in the expansion chamber causes the knife gate to rise until the 4" or 6" drainage opening is completely sealed. This action occurs with a 9" head of drainage water for a 4" valve and a 14" for a 6" valve. When complete closure is obtained in the valve, all back-flow is prevented from entering the building or structure.

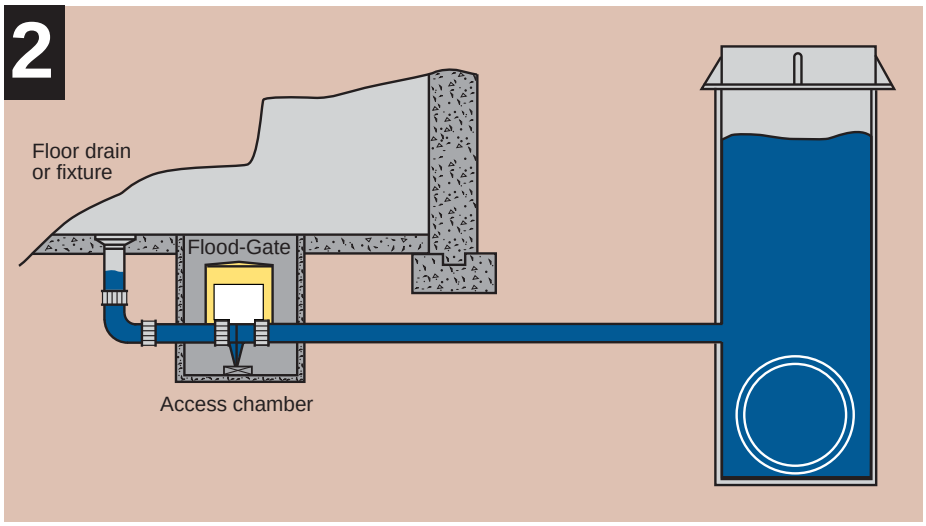

Once the backflow subsides and the drainage water level returns to normal, the counterweight atop the expansion chamber forces the trapped air out of the chamber and into the drainage line, allowing the knife gate to lower to a full open position. Now the Flood-Gate is ready to guard against future backflow situations.

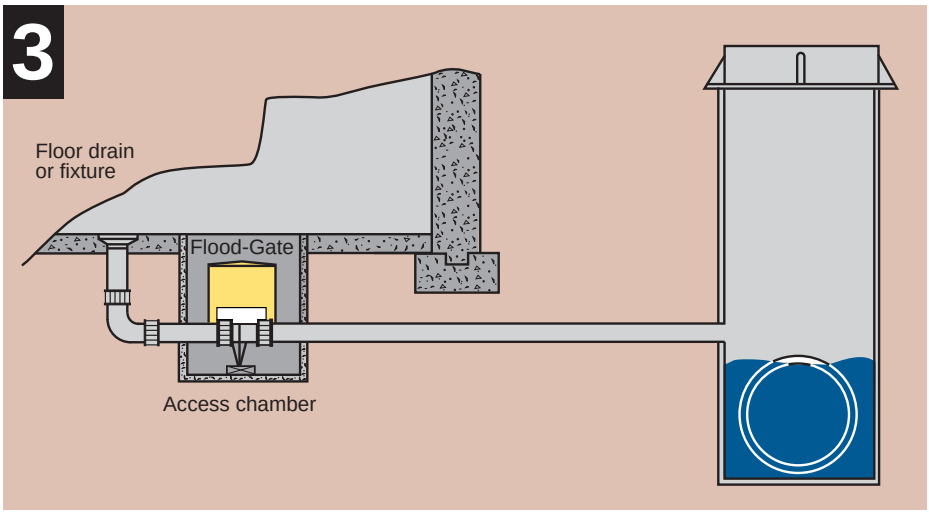

FLOOD-GATE® OPERATION AND APPROVALS

OPERATION

The FLOOD-GATE automatic backwater valve is designed to protect a building and its contents from damage due to a backup in the drainage system. The FLOOD-GATE is intended for installation in the sanitary drain line connecting a building's sanitary system with the local sanitary sewer system or septic tank. It can also be used in storm sewer applications.

OPERATION OF KNIFE GATE

Knife Gate open

The trapped air in the expansion chamber creates an upward force on the counterweight plate of the diaphragm.

Knife Gate closing

When pressure increases beyond 6" head/water, the plate is forced upward activating the closing of the knife gate.

Knife Gate closes off valve

A 9" head/water (4" valve), 14" head/water (6" valve) is sufficient to raise the gate to its fully closed position.

Lacking any upward force, the gate is in the open position, which allows for unrestricted flow through a full port opening.

Approvals

The FLOOD-GATE Automatic Backwater Valve conforms to requirements per ASME A112.14.1 for Backwater Valves.

IAPMO Listed, File No. 3758.

The FLOOD-GATE Automatic Backwater Valve has been approved for use in the following states: Illinois, Indiana, Kentucky, Michigan, Massachusetts, Ohio, West Virginia, and Wisconsin.

FLOOD-GATE® VALVE, DIMENSIONS AND OPTIONS

FLOOD-GATE VALVE

7140Y04 4 in. (100 mm), 60 lbs.

7140Y06 6 in. (150 mm), 90 lbs.

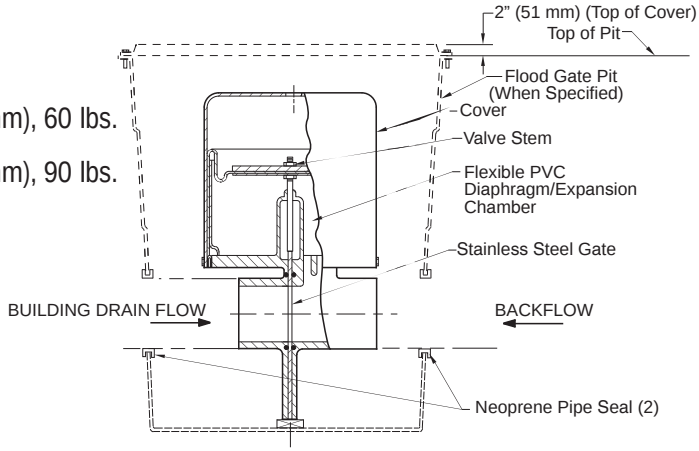

U.S. Patent No. 5,538,032
Other U.S. and foreign patents pending

See back cover for dimensions

OPTIONS

FLOOD-GATE PIT

-FGP (Poly Pit, secured, Gasketed Poly Lid, Hardware), 25 lbs.

-FGS (Poly Pit, secured, Gasketed Steel Lid, Hardware), 69 lbs.

-FGSL Steel Lid Only, 42 lbs.

NOTE: All Flood-Gate Pits (are furnished with two pipe gasket seals) - designate 4" or 6" valve. Pit can only be located in non-traffic areas.

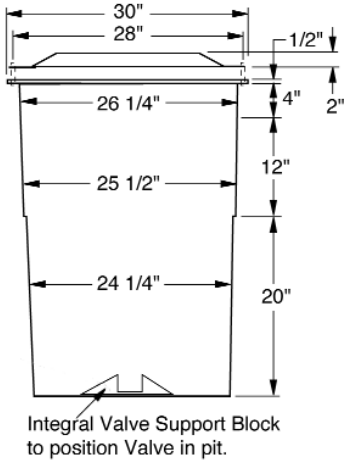

FLOOD-GATE ALARM

-FGA

- Alarm Control Box
- 35 ft. of Cable
- Sensor
- One (1) 9 volt battery* and/or 120 volt A/C power plug

*9 volt battery not included

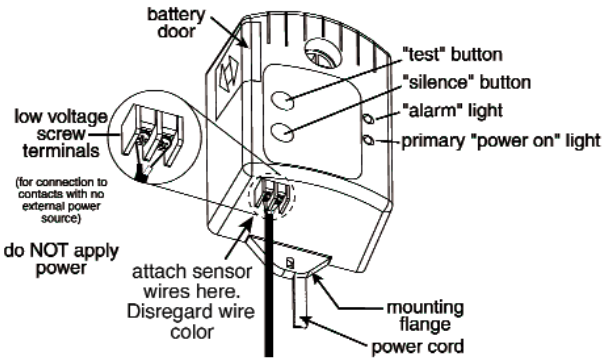

FLOOD-GATE® VALVE INSTALLATION: 4 INCH (7140Y04) & 6 INCH (7140Y06)

View looking into pit with Flood-Gate and cleanout

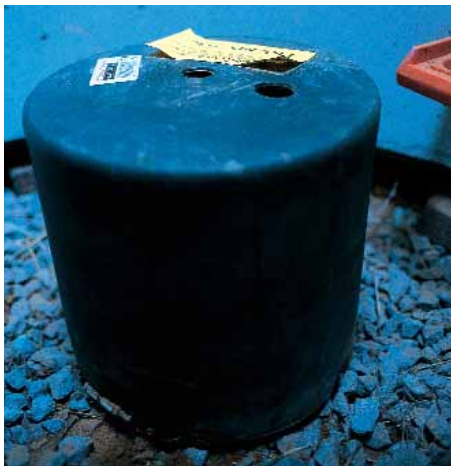

View of Flood-Gate in plastic pit with gravel bottom

The Flood-Gate is installed in a 20-foot deep concrete pit protecting the three branch lines into a church's nursery and overall environment.

The **FLOOD-GATE** automatic backwater valve is designed to protect a building and its contents from flood damage due to a backup in the sanitary sewer system and can also be used in storm sewer applications. Properly installed, the **FLOOD-GATE** will provide years of trouble-free automatic service. Depending on individual circumstances, one of the two following installation guidelines must be followed:

OPTION ONE:

The **FLOOD-GATE** must be installed in a ventilated and dry access pit in the horizontal drain line between the building and the sewer main (a sealed or flooded pit will restrict the free movement of the valve). Although this provides complete protection from flooding, all of the plumbing fixtures in the building will be out of service once the **FLOOD-GATE** is activated. In this type installation, the optional alarm system is highly recommended.

OPTION TWO:

Another installation, sometimes preferred, locates the **FLOOD-GATE** where only the fixtures installed below grade (as in a basement) are connected on the upstream side of the valve. All fixtures installed above grade are connected on the downstream (sewer) side of the valve. This allows continued use of the above grade fixtures, while protecting below grade areas from flooding.

CRITICAL INSTALLATION DATA:

The installer must abide by one critical *MINIMUM* dimension. This is the distance from the top of the horizontal drain line, where the **FLOOD-GATE** is installed, to the top of basement floor drain. **(See FLOOD-GATE Valve Testing Instructions Illustration for minimum bury depth on page 8.)** An additional two (2) inches more than this minimum is suggested, so that the top of the valve cover will be situated 2" **below** the pit cover. The **FLOOD-GATE** valve must have a stable support block between the base of the valve and the bottom of the pit. The optional FLOOD-GATE pit, page 4, is regularly furnished with an integral support block.

FACTORY TESTED:

The **FLOOD-GATE** VALVE must be properly installed with the proper direction of flow (as indicated by the arrows on the valve) to ensure proper functioning. Each **FLOOD-GATE** valve has been thoroughly inspected and tested at the factory. If the valve is damaged during shipment, or if any service to the valve is necessary, return the complete valve to the factory for repair or replacement. **DO NOT** attempt to disassemble or repair the **FLOOD-GATE** in the field.

FLOOD-GATE® SYSTEM SPECIAL INSTALLATIONS

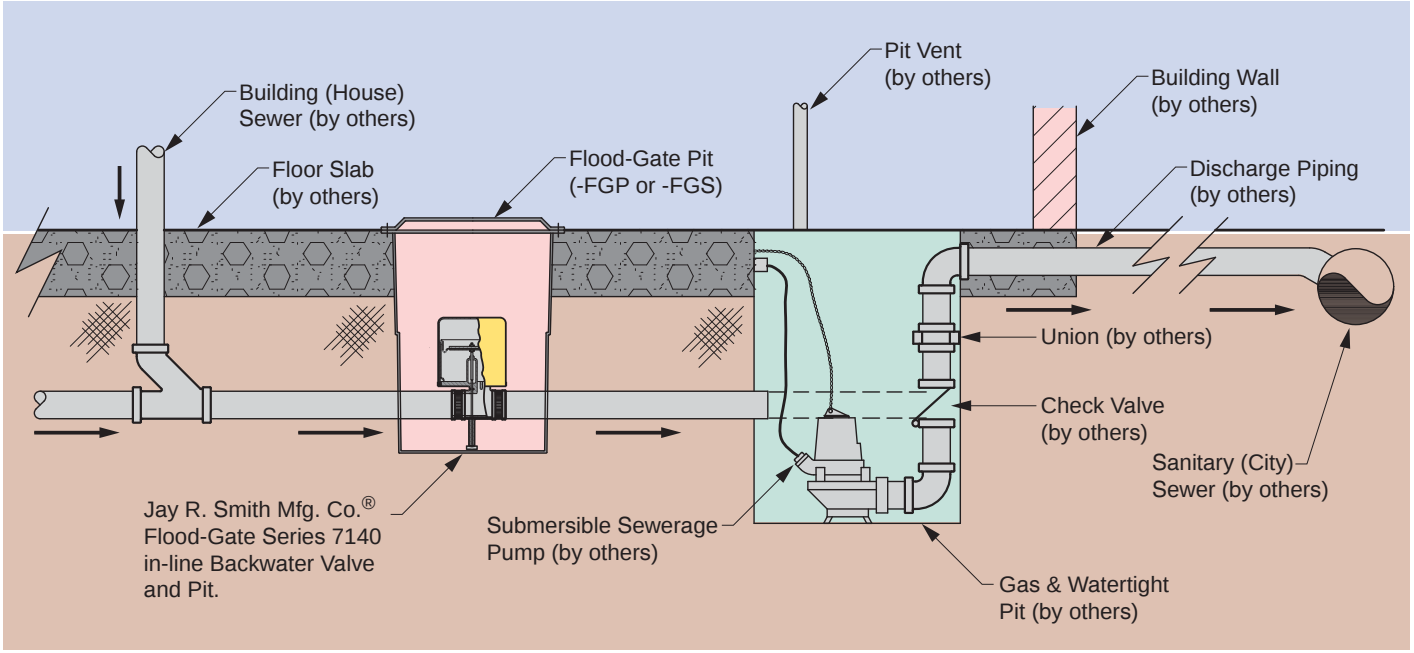

Detail - in-line backwater valve and sewage pump

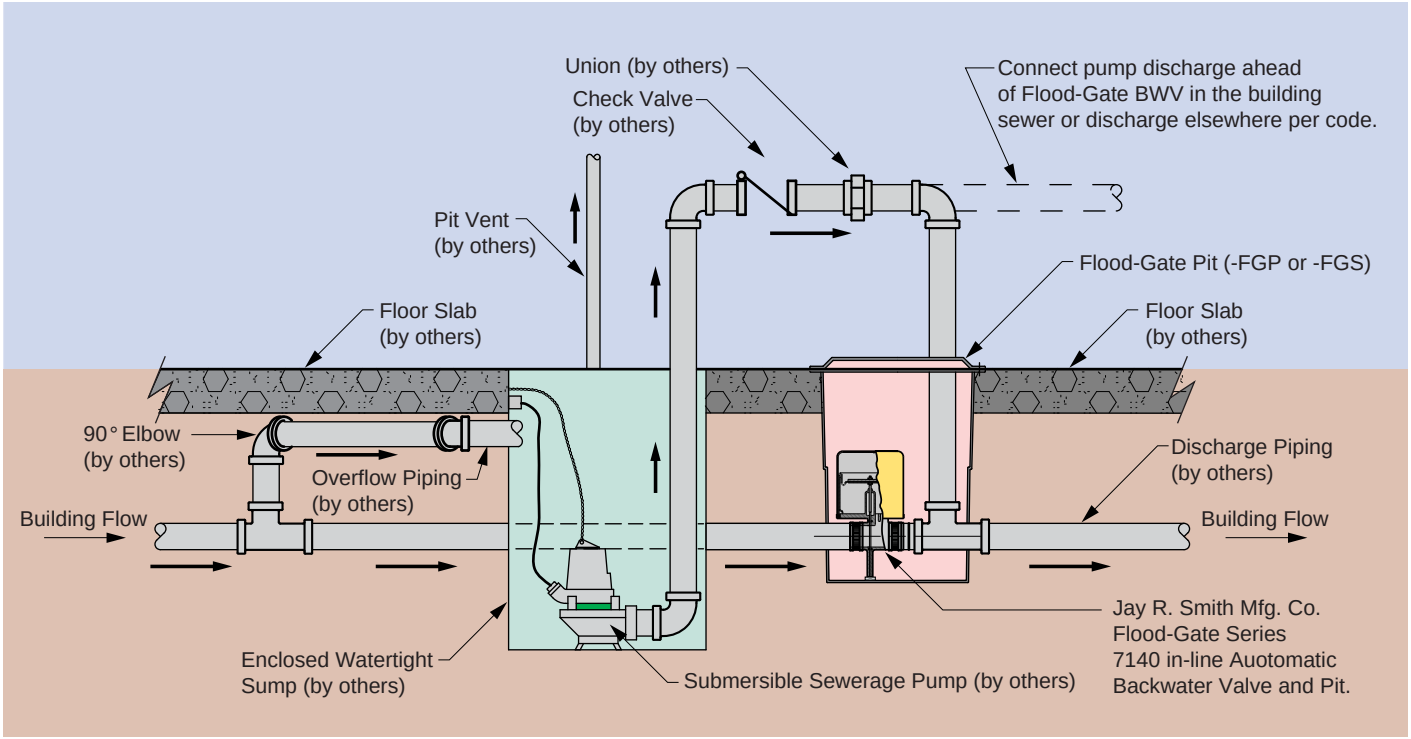

Detail - in-line backwater valve with emergency sewage pump

FLOOD-GATE® VALVE OPTIONAL MONITORING SYSTEM

INSTALLATION INSTRUCTIONS

The monitoring system consists of two (2) parts: the sensor and the monitor. The sensor must be installed on the **FLOOD-GATE** valve in accordance with instructions and the monitor should be installed on a wall where the audible alarm and/or the visual alarm will be noticed.

The installation of the sensor consists of mounting the sensor to the top of the valve cover with the two 1 1/4" and two 5/8" self-tapping screws provided. Once this is accomplished and the sensor has been mounted properly to the valve cover the rod should penetrate the hole in the top of the valve cover with the sensor being approximately 1 1/2" offset of the hole.

Attach the sensor wire to alarm using the screw terminals without active external power source.(Do not apply power) Route the cable from the sensor to the alarm. Using a Phillips head screwdriver attach the sensor power cord to the screw terminals located on the base of the alarm, disregarding wire color. Screw the alarm to your location on the wall using the mounting flange located at the base of the alarm.

The Flood-Gate alarm operates on one (1) 9-volt battery (not provided) and/or the provided 120 V A/C power cord.

The alarm/monitoring system is now operational. Proper operation can be verified using the test procedure included with the Flood-Gate alarm option. When the valve closes, the audible and visual alarm should activate.

OPERATING INSTRUCTIONS

The optional monitoring system is designed to give feedback of the valve status (open or closed). When the valve is closed, the audible/visual alarm will be activated.

Indicator meanings

Green light on	Power On with 120 V A/C plug being used
Red light on	Flood in progress, operation of water fixtures in building should cease. Audio alarm is sounded. Press the silence button to silence alarm but red light remains on.
No lights	9-volt battery being used, 120 V A/C power plug being used/loss of power supply. Press test button to check monitoring system.
Low battery chirp	Indicates battery should be replaced

Features

Automatic alarm reset
Red "alarm" light and green" power on" light, alarm "test" switch, and horn "silence" switch.
Alarm horn sounds at 87 decibels at 10 feet.
Low battery chirp
Easy access battery compartment
CSA Certified
Auxiliary dry contacts for any UL listed mechanism

FLOOD-GATE® TESTING INSTRUCTIONS AND ILLUSTRATIONS

IMPORTANT: THIS PROCEDURE MUST BE FOLLOWED AFTER THE INITIAL INSTALLATION.

1. Place a "Test Ball" through the main cleanout into the horizontal drain line and inflate it.

2. With an ordinary garden hose, run water into the building drain through the cleanout opening (this will simulate a backup of the main sewer).

3. Watch the round opening in the top of the **FLOOD-GATE** VALVE cover. You should see the end of the valve stem rise as the valve closes. Full closure should occur before the water in the cleanout opening reaches floor level. This means the valve is closing properly.

4. Deflate the "Test Ball." This will allow the drain to open and you should be able to see the valve stem drop; returning to its normal open position.

NOTE: It is important to test the **FLOOD-GATE** after long periods of inactivity to assure readiness. Follow these instructions to test for proper operation.

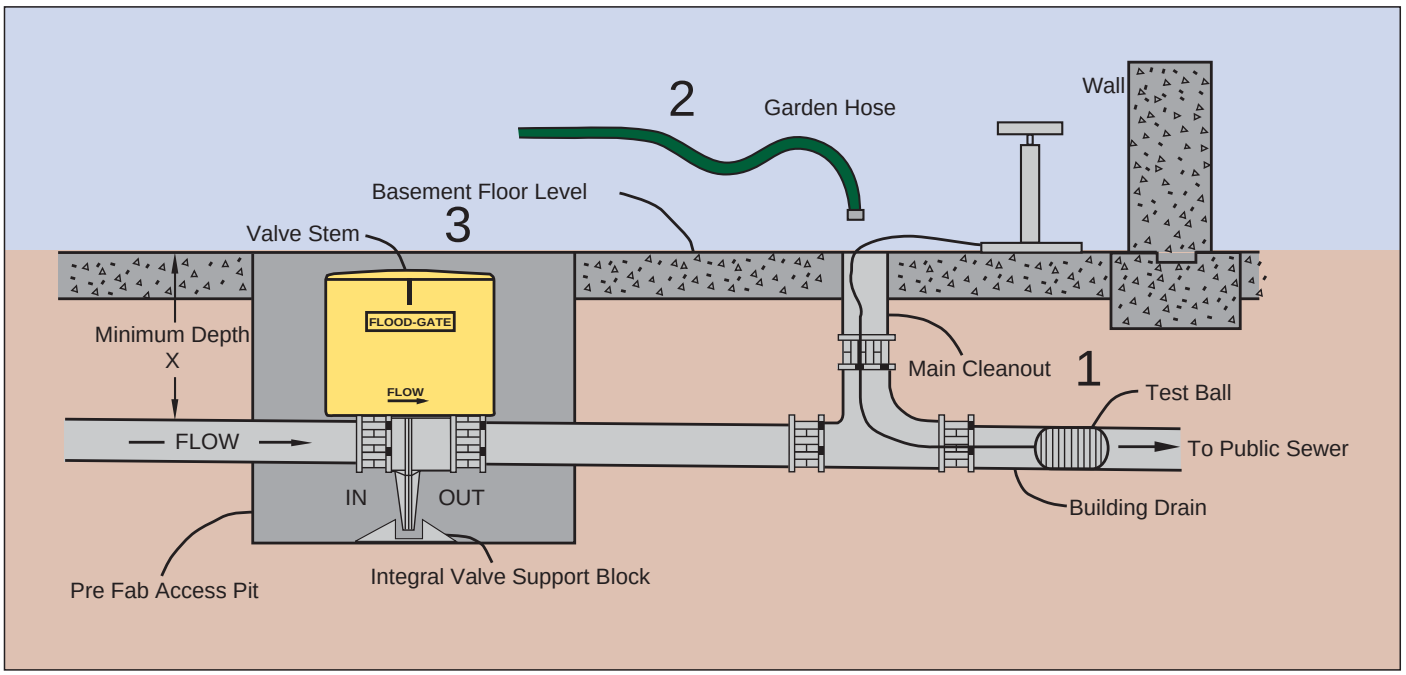

MINIMUM BURY DEPTH

7140Y04	X= 9 inches
7140Y06	X=14 inches

NOTE: X = The dimension from the top of the horizontal drain line to the top of basement floor drain.

FLOOD-GATE® SPECIFICATIONS

Application

Backwater Valve for gravity sanitary drainage system connected to municipal sanitary sewers or septic tanks.

Material Specifications

The assembly comprises numerous parts. The following is a brief description of the main components.

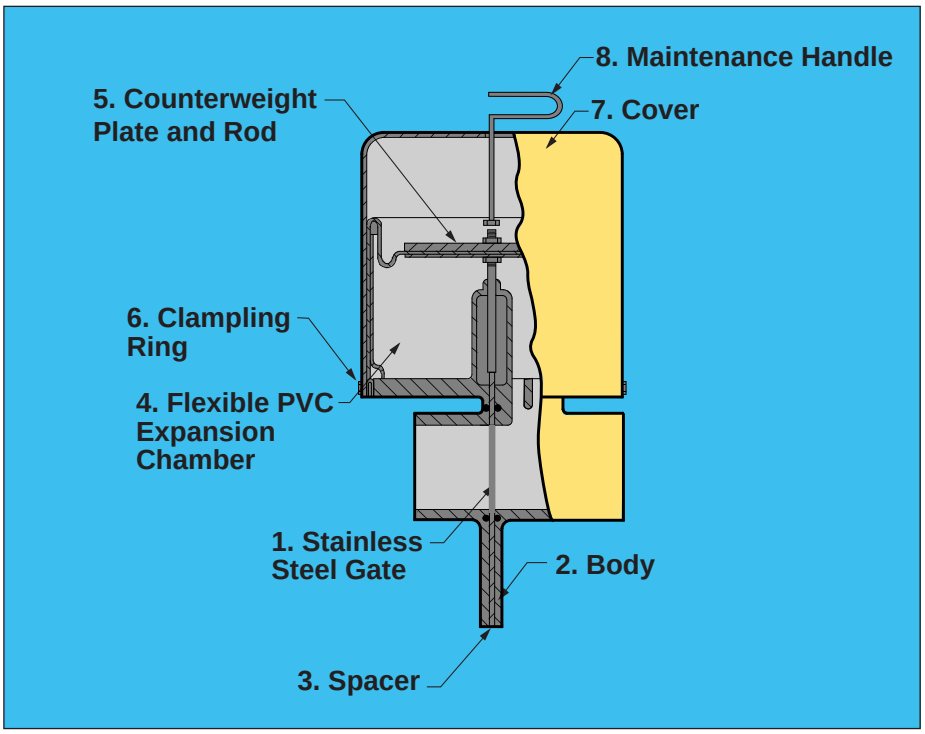

1. **Gate** - Manufactured from stainless steel type 304 with full port opening and integral closing stopper.

2. **Body** - Two cast iron halves, designed to bolt together to enclose gate. Cast iron shall be Class 25 to ASTM A48. Both sections are equipped with barrels suitable for mechanical coupling to upstream and downstream sections of pipe. Out (or downstream) fitting equipped with full port opening. Each half incorporates a continuous groove around the circumference of the opening to accept an O-ring. These O-rings act to seal against the gate.

3. **Spacer** - Stainless steel gasket placed between the two body halves to permit the (thinner) gate to slide within the two halves of the body.

4. **Expansion chamber** - Flexible PVC diaphragm.

5. **Counterweight Plate, Plate Weight Holder, and Rod** - Counterweight Plate is affixed to the top of the expansion chamber using a threaded rod equipped with nuts. The nuts compress the top surface of the expansion chamber between the counterweight plate on top and the plate weight holder on the bottom. The rod is connected to the top of the gate. Expansion chamber Counterweight Plate is made of cast iron.

6. **Clamping Ring** - Clamps the bottom skirt of the expansion chamber to the circumference of the body, forming a watertight seal. This seal prevents waste water which enters the expansion chamber through the downstream port under surcharge conditions from leaking out of the expansion chamber.

7. **Cover** - Polyethylene cylinder which is positioned over the expansion chamber to protect it and constrain its expansion under surcharge conditions.

8. **Maintenance Handle** - Tee shaped handle used to attach to stem in center of counter weight plate to exercise valve during annual maintenance.

FLOOD-GATE® ILLUSTRATION

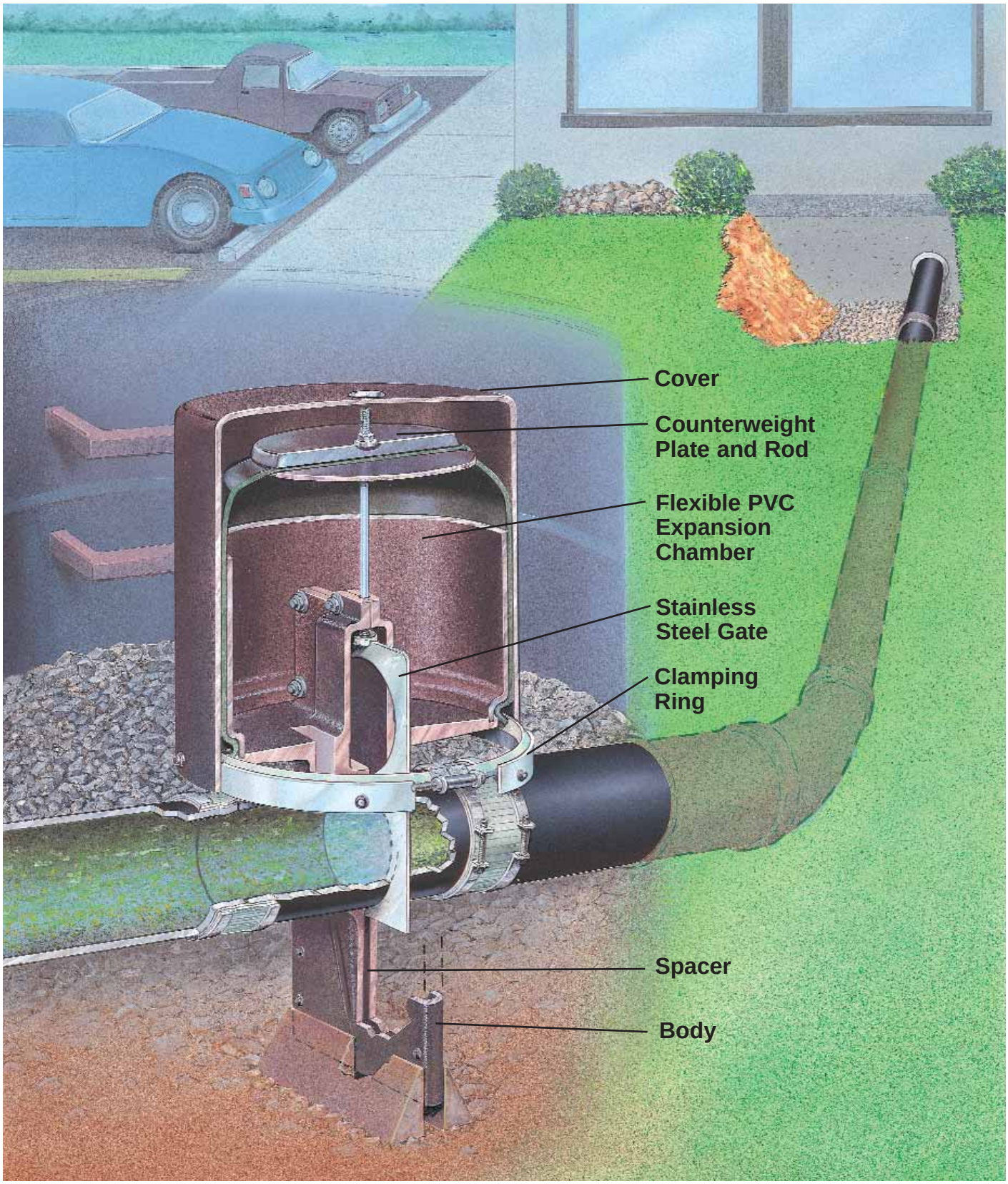

FLOOD-GATE® BACKWATER VALVE

IN-LINE AUTOMATIC BACKWATER VALVE

FUNCTION: Functions as a drainage control valve providing "closure" protection during emergency storm conditions or when building is completely shut down. The FLOOD-GATE® does not have to be activated as no electronics are required for valve operation. The valve is completely automatic both closing and resetting. Once closed it prevents any leakage beyond the gate. Applications include all commercial, institutional, residential and industrial installations including basements and elevator pits.

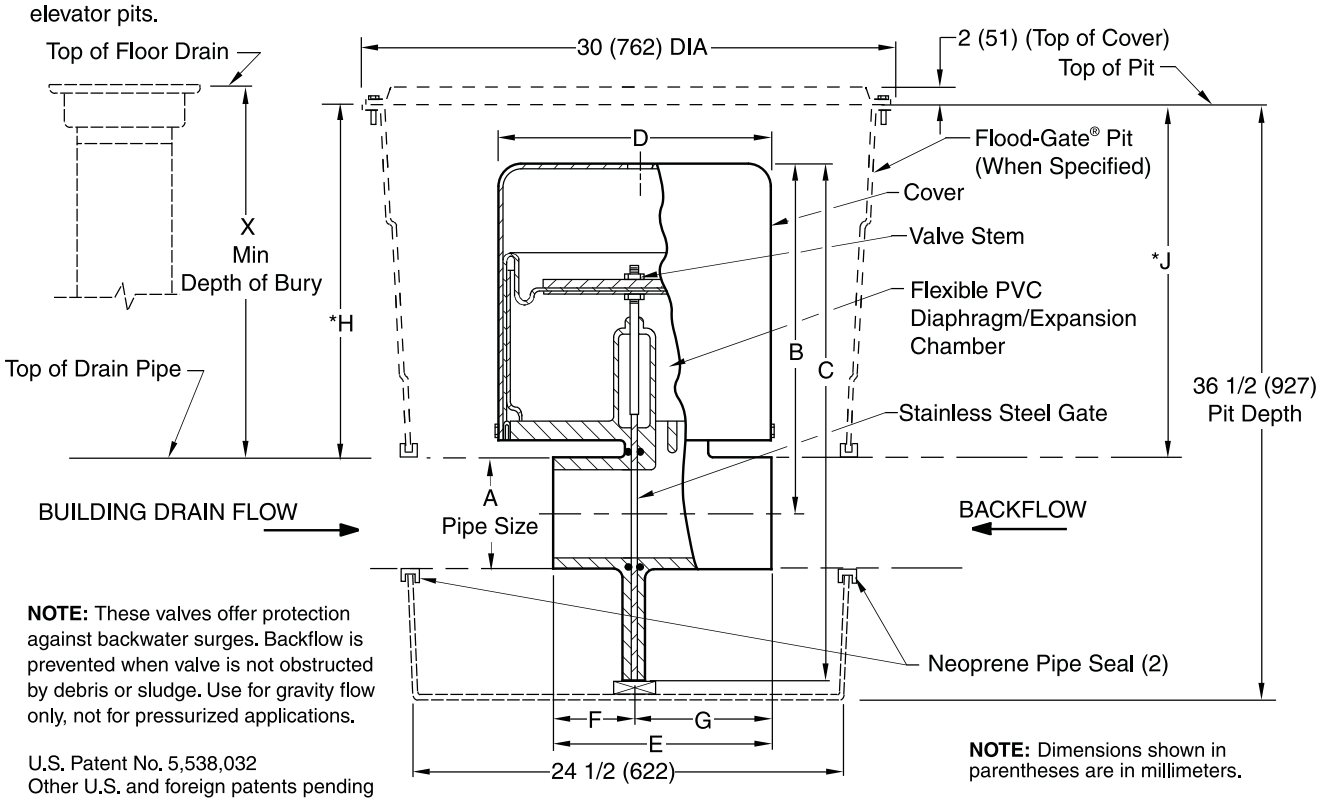

NOTE: These valves offer protection against backwater surges. Backflow is prevented when valve is not obstructed by debris or sludge. Use for gravity flow only, not for pressurized applications.

U.S. Patent No. 5,538,032
Other U.S. and foreign patents pending

NOTE: Dimensions shown in parentheses are in millimeters.

A DIA NO-HUB (-Y) IN/OUT SIZE	B CENTERLINE TO TOP	C OVERALL HEIGHT	D DIA WIDTH	E LENGTH	F INLET LENGTH	G OUTLET LENGTH	*H	*J	X MIN BURY DEPTH	BASE WIDTH
04 (100)	15 15/16 (405)	22 15/16 (583)	12 5/8 (321)	6 5/8 (168)	2 3/8 (60)	4 1/4 (110)	26 1/4(665)	26 3/4(680)	9 (230)	7 1/2 (190)
06 (150)	20 3/8 (518)	31 1/4 (795)	13 1/4 (335)	8 3/16 (208)	3 3/16 (85)	5 (125)	22 1/4(565)	22 3/4(580)	14 (355)	9 1/2 (240)

*Dimension can be decreased by up to 10 (254) for the 4 (100) size and 3 (76) for the 6 (150) size by cutting the pit and telescoping the 2 sections to meet required depth. See instructions supplied with pit.

REGULARLY FURNISHED:
Duco Coated Cast Iron Body Complete with Stainless Steel Gate and Flexible PVC Diaphragm/Expansion Chamber.

Conforms to ASME A112.14.1-2003
IAPMO Listed, File No. 3758

VARIATIONS:
- ☐ Flood-Gate® Alarm
  (-FGA, Alarm Control Box, Sensor and 35' Connecting Wire)
- ☐ Flood-Gate® Pits **(FOR NON TRAFFIC AREAS ONLY!)**
  (-FGP, Poly Pit, Secured, Gasketed Poly Lid and Hardware)
  (-FGS, Poly Pit, Secured, Gasketed Steel Cover and Hardware)
  (-FGSL, Steel Cover only)

SMITH® CUSTOMER DRIVEN
JAY R. SMITH MFG. CO.®
DIVISION OF SMITH INDUSTRIES, INC.
POST OFFICE BOX 3237
MONTGOMERY, ALABAMA 36109-0237 (USA)
TEL: 334-277-8520 FAX: 334-272-7396 www.jrsmith.com

MEMBER OF:

Visit www.jrsmith.com