Jay R. Smith Mfg. Co.
LaborSaver™ Fixture Support

Fig.#: 0710

Fig. #: 0760

Fig. #: 0616 & 0801

Fig. #: 0615 & 0831

Time and Labor Savings

SMITH®

CUSTOMER DRIVEN

The Labor Saver™ Fixture Support from Jay R. Smith Mfg. Co.

The Labor Saver™ Urinal, Lavatory, Water Cooler, and Sink Fixture Support, Figure Numbers 0609 through 0925, has been designed to speed up the installation process by using a one-piece, pre-assembled rigid steel frame construction. This innovative support from Jay R. Smith Mfg. Co. allows for installation in narrow wall and metal stud configurations. The symmetrically designed fixture support features both horizontal and vertical adjustability to fit varying installation conditions.

The 3" width of pre-assembled frame allows for installation in narrow and metal stud wall configurations.

Symmetric Construction – easy to install

Benefits and Advantages

- **Compact and rigid one piece steel frame.**
- **Pre-assembled** - few components to be lost.
- **Reduced inventory** - one support for most applications.
- **Unique bracket design** - for all types of fixtures.
- **Reduced installation space** - fits narrow wall and metal stud configurations.
- **Symmetric construction** - easy to install.
- **Labor savings** - Dramatically reduces cost associated with assembly, installation and material handling.
- **Excellent versatility for prefab assembly in battery.**
- **Easier to adjust** - needs front adjustment only after the wall is in place.
- **Superior to traditional support** - which requires both front and back access for final adjustment.
- **Reduced hanging cost** - water piping can be secured to Labor Saver™ Support.

horizontal and vertical adjustability to fit varying installation conditions

Suggested Steps to Labor Savings

Suggested Installation Steps
These suggested on-grade installation steps depict a single installation. Follow these steps or recommended practices for an easy, fast and reliable installation each and EVERY TIME!

Suggested Installation Tools

1. *Marker/Pencil*
2. *Chalk or Snap Line*
3. *Drill*
4. *Hammer*
5. *Torque Wrench*
6. *Tape Measure*
7. *Level*
8. *Eight (8) anchoring bolts*

1 *Determine wall and chase lines, mark center of fixture support and location of the eight (8) anchors.*

2 *Drill the eight (8) anchoring holes.*

reduces assembly and installation costs

5 *Verify and ensure horizontal level of arm couplings/ mounting plate. Adjust as needed.*

3 *Check level and set. Secure with eight (8) anchor bolts centering the fixture support in the process. Secure the eight (8) nuts.*

4 *Verify and ensure verticality of fixture support. Adjust as needed.*

Unique Bracket Design

The Labor-Saver™ Fixture Support requires only front accessibility for final adjustment. Fixture setting allows for easier adjustment, both vertically and horizontally.

6 *Protect the coupling threads during installation with plastic inserts provided.*

After the finished wall is completed, accomplish required final adjustment and fixture installation procedures.

one-piece, pre-assembled rigid steel construction

compact design fits narrow wall and metal stud configuration

Key Installation Features

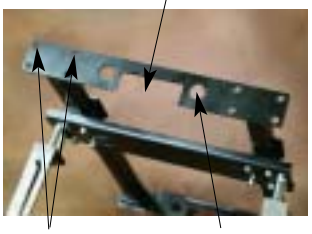

Labor Saver™ Fixture Support Illustration
Figure Numbers 0609-0925

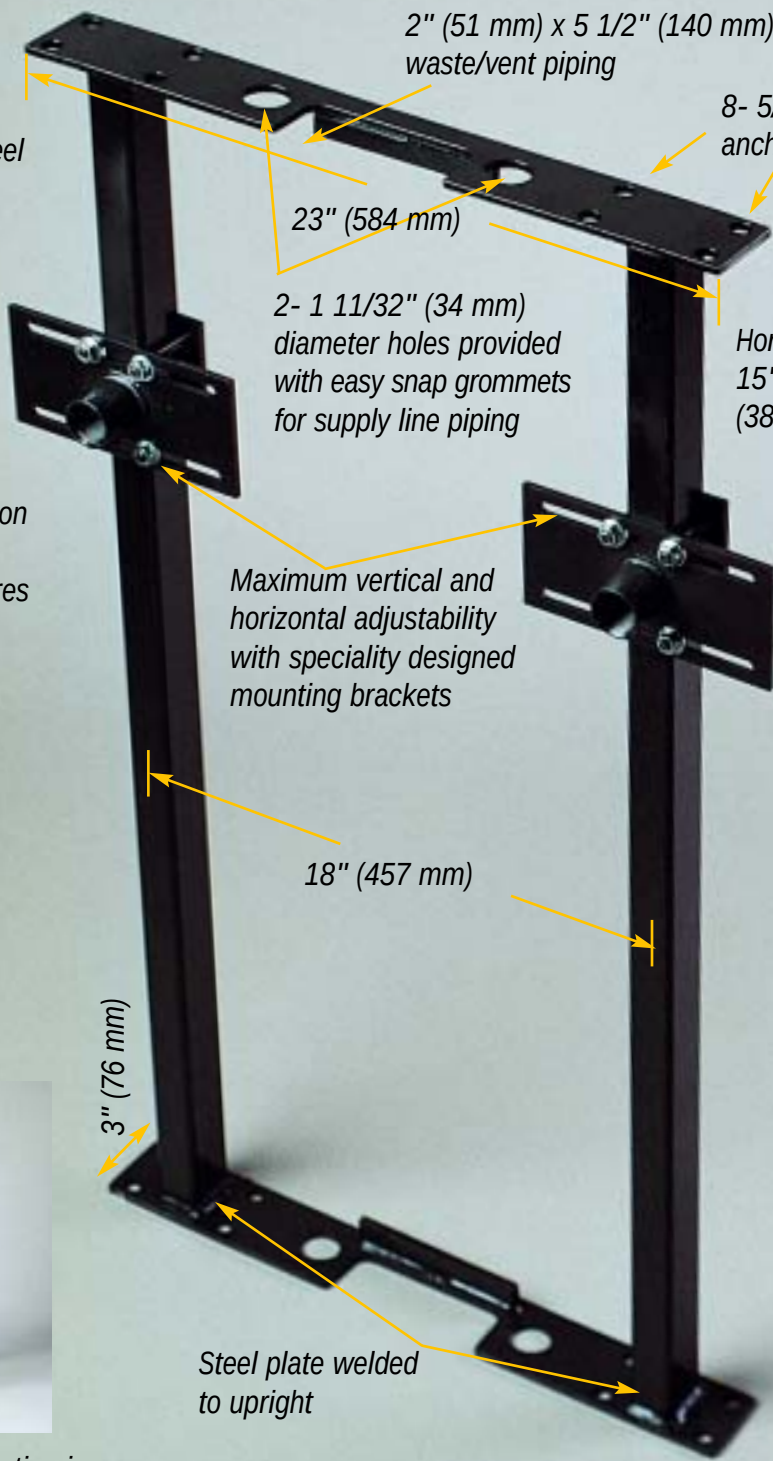

Allows for installation in narrow and metal stud wall configuration

Symmetric construction, easy to install

- Conforms to the applicable ASTM specifications
- Meets or exceeds the applicable requirements of ASME A112.6.1 M 1997
- IAPMO Listed
- Patent Pending

Labor Saver™ Fixture Support

Installation Options

The Labor Saver™ Fixture Support is designed to fit varying installation conditions.

The Labor Saver™ Fixture Support will accommodate a variety of fixture manufacturers in several configurations:

- Off-the-floor urinals.
- Off-the-floor lavatories (concealed arms, exposed arms, concealed hangers).
- Off-the-floor water coolers.
- Off-the-floor sinks.

The Labor Saver™ offers versatility in supporting a single fixture on one wall or may be used to support two fixtures, each mounted on the opposite sides of a wall.

Urinal support for off-the-floor with supporting and bearing studs (Figure #0615) and electric water cooler support (Figure #0831)

Urinal support for off-the-floor with hanger plate and washout urinals with wall hangers (Figure #0616) and lavatory support with concealed hangers (Figure #0801)

Lavatory support with concealed arms (Figure #0710)

Lavatory support with exposed arms (Figure #0760)

Contact your local representative:

SMITH® CUSTOMER DRIVEN
JAY R. SMITH MFG. CO.
DIVISION OF SMITH INDUSTRIES, INC.
POST OFFICE BOX 3237
MONTGOMERY, ALABAMA 36109-0237 (USA)
TEL: 334-277-8520 FAX: 334-272-7396 www.jrsmith.com

MEMBER OF:

For more information on our products or to contact your local Jay R. Smith Mfg. Co. representative, visit our Web site at : **www.jrsmith.com**