The Quad Close Trap Seal Device By Jay R. Smith Mfg. Co.®

The Answer to Infrequently Used Floor Drains and Sewer Gas Odors

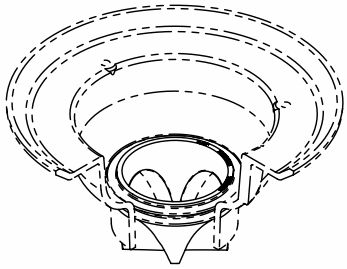

A Reliable Solution –

In protecting the trap seal.

Easy to Install –

In the floor drain, not the plumbing system.

A Value for the Purchaser –

Saves water and is easier to maintain than a trap primer.

The Quad Close Barrier Type Floor Drain Trap Seal Device is for use in the floor drain outlet or the throat of adjustable strainer to:

1. Minimize the evaporation of the trap seal for the floor drain,
2. Prevent the emission of sewer gases, and
3. Diminish the backup of raw sewage into a building.

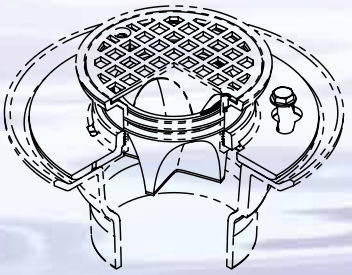

SMITH®
CUSTOMER DRIVEN

JAY R. SMITH MFG. CO.
Member of Acorn Engineering's Family of Companies

Quad Close Trap Seal Device

Specify and Use Figure Number 2692

The Quad Close Barrier Type Trap Seal Device creates a watertight seal inside the drain and/or throat of the strainer. It will stay open when water is flowing into the floor drain. It will close when the water stops flowing. When closed, the Quad Close prevents the emission of sewer gas, minimizes the evaporation of water in the trap, and helps prevent backup into a building.

The Quad Close is made of a chemically resistant elastomer that is durable and reliable. The elastomeric material in the Quad Close is 2 to 4 times thicker than similar products. It is less vulnerable to UV, chemicals, cuts and tears.

Quad Close Trap Seal Device Advantages:

- An alternative method of protecting the floor drain seals.
- Tested and meets or surpasses many of the requirements for ASSE 1072.
- Reduces the frequency needed for the periodic admission of water into the floor drain's trap to maintain a seal.
- Easily removed for inspection and cleaning.
- Prevent the emission of sewer gases into a living or work area.
- Minimize and/or prevent the evaporation of the trap seal water through the drain.
- Hold up to 10.00" of back pressure and can help prevent back flow.
- Will close completely with a very small amount of back pressure.
- Can be specified for use in drains installed in areas of infrequent use; the Quad Close compliments floor drains that have been specified with a trap primer connection.
- Thicker and more durable than other trap seals, as such is less vulnerable to UV, chemicals, cuts and tears.
- Designed to fit inside 2", 3", and 4" PVC and cast iron pipe. The 3 1/2" size is designed to fit inside the throat of the adjustable strainer head on a shower drain.
- Works in the retrofitting of existing drains.

Quad Close Trap Seal Device Installation Instructions

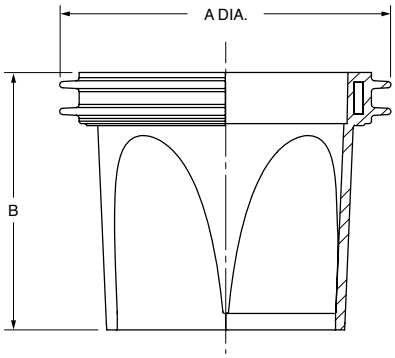

Fig. No.	A (Pipe Size)	B
2692-02	02(50)	2 3/4(70)
2692-03	03(75)	2 3/4(70)
*2692-0350	0350(89)	2 3/4(70)
2692-04	04(100)	2 3/4(70)

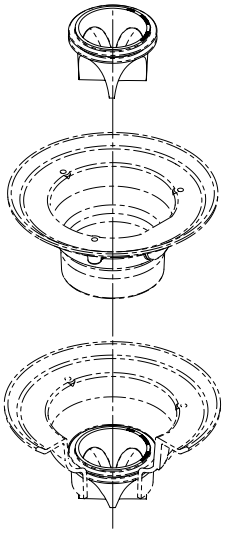

Installation in Drain Body Outlet 02 (50), 03 (75) & 04 (100) Sizes

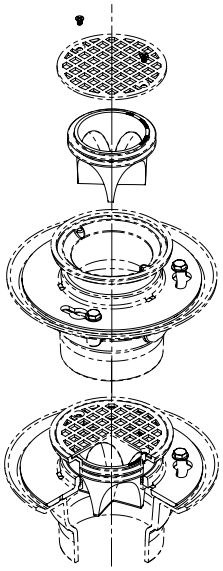

Installation in Strainer Throat 0350 (89) Size

INSTALLATION: The 02 (50), 03 (75) & 04 (100) trap seal sizes install in the drain outlet and inside PVC or cast iron pipe. The 0350 (89) trap seal size installs in the throat of adjustable strainers. To install simply insert the trap seal in the drain outlet or throat of strainer until the top of trap seal is flush with top of drain outlet or strainer throat

Categories	Quad Close Trap Seal Device Overview—Fig. # 2692
Function:	The purpose of the trap seal is to minimize the evaporation of the trap seal for the floor drain. It will open to allow the flow of drainage and close when there is no flow. The trap seal is for use in the floor drain outlet or the throat of adjustable strainers.
Performance:	The 2692 Quad Close Trap Seal has been evaporation tested for thousands of hours with very little loss of water due to evaporation.
Material:	The Quad Close Trap Seal is made from a chemically resistant elastomer.
Features and Sizes:	Designed to handle a wide range of pipe and internal drain body diameters. It can be retrofitted into existing drains. Available in 2”, 3”, 3-1/2”, & 4” sizes. To install, simply insert the trap seal in the drain outlet, inside the pipe or throat of strainer until the top of trap seal is flush with top of drain outlet, inside pipe or strainer throat.
Benefits:	If sewer gases are escaping into the room due to the lack of water to maintain a water seal in the floor drain trap, this device can easily be inserted into the drain to prevent evaporation of trap seal water and to prevent sewer gases from escaping into the room. It will help mitigate backflow.

Frequently Asked Questions

1. Will gas pass through the cut in the Quad Close Trap Seal Device?	Most sewer gas is heavier than air, thus a small amount (so small it is immeasurable) of back-pressure will close the Quad Close causing the sewer gas to remain in the trap. The Quad Close meets or surpasses many of the requirements of ASSE 1072.
2. How do beer and soda affect the device; will it stick together?	The Quad Close device is made from a specifically formulated elastomeric material. This proprietary material aids in preventing the substances from sticking to the surface of the device.
3. How is it affected by debris such as cigarette butts, peanuts shells, etc?	For this type of debris, the floor drains should be specified with a bucket* that will prevent most of the debris from entering the drain line and clogging the drain. The type of grate openings furnished for the floor drains can also prevent debris from entering the drain. If debris does past the bucket and grate, the opening in the Quad Close is large enough to allow most debris to pass through into the drain. *A bucket cannot be used with the 2692-0350 or any other version used in a strainer head.
4. What drain and pipe dimensions will the Quad Close fit?	The Quad Close has been designed to handle a wide range of pipe and internal drain body diameters. The 2692 fits inside 2”, 3” & 4” PVC and cast iron pipe. The 2692 3-1/2” size fits into a strainer having a nominal inside diameter of 3-1/2”.
5. What are the flow rates of the Quad Close?	The flow rates for 2692 Quad Trap Seal: 2.00” - 8.00 GPM 3.00” - 24.00 GPM (The larger flow is due to the Trap Seal being lower into the drain body). 3.50” - 14.00 GPM (The Trap Seal is installed in the strainer). 4.00” - 35.00 GPM Note: All flow rates were established as per the requirements of ASSE Standard 1072

For more information on our products or to contact your local Jay R. Smith Mfg. Co. representative, visit www.jrsmith.com.

SMITH®
CUSTOMER DRIVEN
JAY R. SMITH MFG. CO.
Member of Acorn Engineering's Family of Companies
POST OFFICE BOX 3237 MONTGOMERY, ALABAMA 36109-0237 (USA)
TEL: 334-277-8520 FAX: 334-272-7396 www.jrsmith.com

MEMBER OF:

ACORN ENGINEERING COMPANY
FAMILY OF COMPANIES

SPM 0502
2/10